Utah National Guard
Regulation 381-10/UTANGI 14-104

Intelligence Activities

Distribution Restriction Statement.
This publication contains operational information that is for official Government use only. Distribution is limited to U.S. Government agencies. Requests from outside U.S. Government must be made to the J-2, Utah National Guard

Destruction Notice.
Destroy by any method that will prevent disclosure of contents by reconstruction of the document.

Headquarters
Utah National Guard
20 JUL 2006

FOR OFFICIAL USE ONLY

HEADQUARTERS UTAH NATIONAL GUARD
Office of The Adjutant General
Post Office Box 1776
Draper, Utah 84020-1776

UTAH NATIONAL GUARD
REGULATION 381-10/UTANGI 14-104

20 July 2006

Intelligence Activities

Summary: This regulation implements the Department of Defense, Department of the Army Department of the Air Force, and National Guard Bureau regulations and instructions regarding Intelligence Activities. This regulation incorporates AF14-104 dated 14 April 2005 and AR 381-10 dated 22 November 2005. Whenever this regulation is silent on any practice or procedure; the appropriate service regulation, DOD Regulation or Directive, or Executive Order will apply.

This takes precedence over any standing unit Standard Operating Procedures (SOP) affecting these programs.

Applicability: This regulation addresses procedures that apply to all Utah Army and Air National Guard units, activities, and staffs, civilian employees, and military members when conducting intelligence activities.

Interim Changes: Interim changes to this regulation are not official unless they are authenticated by the J-2, Utah National Guard. Users will destroy interim changes on their expiration dates unless sooner superseded or rescinded.

Suggested Improvements: The proponent of this regulation is the J-2, Utah National Guard. Users are invited to send comments and suggested improvements to J-2, 12953 S. Minuteman Drive, Draper, UT 84020-1776.

Distribution: Unlimited Distribution to administer personnel security programs.

Classification: This publication is FOR OFFICIAL USE ONLY.

TABLE OF CONTENTS

TABLE OF CONTENTS 3
Chapter 1 4
General Provisions 4
1-100. References 4
1-101 Definitions 4
1-200. Responsibilities 5
Chapter 2 7
Guidance 7
2-100. Organization Inspections 7
2-101. Intelligence Oversight Officer/Monitor 7
2-102. Training Guidance 7
2-103. Intelligence Oversight Binder/Policy Book 7
2-104. Intelligence Oversight Inspections/Evaluations 7
2-105. Counterdrug Activities 7
2-106. Signals Intelligence Activities (SIGINT) 8
2-107. Imagery Intelligence (IMINT) 8
2-108. Counterintelligence (CI). 8
2-109. Reporting Procedures 8
2-110. Public Affairs. 9
2-111. Tenant Intelligence Units, Activities, and Staffs. 9
2-112. Training. 9
2-113. Joint Intelligence Activities. 9
2-114. Intelligence Sharing 9
Chapter 3 10
Support to Force Protection 10
3-100. Threat Information Dissemination 10
3-101. Law Enforcement Responsibilities. 10
APPENDIX A 11
POSTERS 11
APPENDIX B 13
APPENDIX B 14
PROCEDURE 15 GUIDE AND FLOW CHART 14
APPENDIX C 1
Utah National Guard 1
Intelligence Oversight Inspection/Evaluation 1

Chapter 1
General Provisions

1-100. References

a. Exec. Order 12333 United States Intelligence Activities. as amended by
b. Executive Orders 13284 and 13355;
c. DoD 5240.1 DoD Intelligence Activities .
d. DoD 5240.1R Procedures Governing DoD Intelligence Component Activities.
e. Department of Defense Instruction 5240.4.
f. DOD Directive 5148.11, Assistant to the Secretary of Defense for Intelligence Oversight (ATSD(IO)), 21 May 2004
g. USSIDs US Signals Intelligence Directives
h. NGR 20-10 Inspector General Intelligence Oversight Procedures.
i. NGR 500-1 Military Support to Civil Authorities.
j. NGR 500-2 National Guard Counterdrug Support.
k. NG Pam 500-2/ANG Pam 10-801 National Guard Counterdrug Coordinator's Handbook
l. AFPD 14-1, Intelligence, Surveillance, and Reconnaissance (ISR) Planning, Resources, and Operations,2 April 2004
m. AFI 14-119, Intelligence Support to Force Protection, 5 June 2004
n. AFI 33-324, The Information Collections and Reports Management Program: Controlling Internal, Public, and Interagency Air Force Information Collections, 1 June 2000
o. AFMAN 37-123, Management of Records, 31 August 1994
p. AFI 71-101, Volume 1, Criminal Investigations, 1 December 1999
q. AFI 90-201, Inspector General Activities, 22 November 2004
r. AFI 14-104 Conduct of Intelligence Activities.
s. AFI 14-105 Intelligence Mission Responsibilities.
t. AFI 90-201 Inspector General Activities.
u. AFI 90-201 Inspector General Activities.
v. AR 381-10 US Army Intelligence Activities.
w. AR 381-12 Subversion and Espionage Directed Against US Army (SAEDA).
x. AR 381-20 US Army Counterintelligence Activities.
y. AR 500-51 Support to Civilian Law Enforcement.

1-101 Definitions

a. For the purposes of this regulation Intelligence Units, Intelligence Staff, G2/S2 sections, Intelligence Sections, Intelligence training sections or branches, contractors assigned to these elements, are all considered elements with intelligence missions.

b. Intelligence professional means military intelligence officer, intelligence officer, or senior non commissioned officer who has been trained at an appropriate intelligence school.

c. "Questionable Activity" is defined as a potential violation of intelligence oversight rules or regulations. "Questionable Activity" is what the individual sees and not what the unit or other individuals think it may be.

d. Intelligence components include intelligence units, G2/S offices, and security offices when carrying out intelligence activities.

1-200. Responsibilities.

a. J-2, Utah National Guard.

(1) Serves as or ensures that the State Intelligence Oversight Officer (SIOO) is appointed and has responsibility for the implementation of this regulation. The State Intelligence Oversight Officer will be an intelligence professional. The SIOO may appoint assistant intelligence oversight officers to assist in the execution of the regulation.

(2) Ensures that appropriate training sessions, command inspections, staff assistance visits are done for maximum compliance with this regulation.

(a) Conducts staff assistance visits to ensure intelligence oversight is implemented.

(3) Assists the J-3 staff in reviewing training plans for intelligence activities.

(4) Consults with the Staff Judge Advocate General to interpret the appropriate laws and regulations as they apply to the Utah National Guard.

(5) Ensures that procedures for reporting "questionable activities" exist within organizations, staffs, or offices used for intelligence purposes; and that individuals are aware of their responsibilities to report such activities through their reporting chain.

(6) Ensures that an Intelligence Oversight Monitor appointed for each Battalion or Squadron sized intelligence unit. All other units with an intelligence component must have an IO monitor at the Brigade, Wing level, or equivalent level.

b. Utah Inspector General.

(1) Determines if intelligence units conduct foreign intelligence and counterintelligence activities in accordance with this and other applicable regulations.

(2) Determines and ascertains whether any organization, staff, or office not specifically identified as an intelligence element is being used for foreign intelligence or counterintelligence purposes, and if so ensures its activities comply with this regulation and other applicable laws or regulations.

(3) Evaluates leadership awareness and understanding of the authorities for intelligence collection about US person information.

(4) Ensures that procedures exist within each element for reporting questionable activities, and that personnel are aware of their responsibility to report.

(6) Provides staff advice to the Adjutant General, Commanders, and State Intelligence Oversight Officer as needed.

(7) As part of the inspection of intelligence elements, will determines if intelligence components or other elements performing intelligence information collection, retention, or dissemination activities are involved in "questionable activities."

(8) Reports all "questionable activities" to the NGB-IGI, NLT 5 days after discovery.

(a) Air Guard reports are forwarded to SAF/IGI consistent with AFI 14-104

((9) Submit quarterly IO reports to the NGB-IGI within 5 days of the close of each quarter.

(10) Quarterly reports will include-

(a) A description of significant oversight activities undertaken during the quarter.

(b) Identification of unlawful or improper activities discovered or reported.

(c) Suggestions for improvement of the oversight system.

c. Commanders of intelligence units or intelligence elements will:

(1) Ensure that any or all collection activities comply with this regulation, appropriate service regulations, DOD Directives, and Executive Orders.

(2) Ensure that all soldier or airmen assigned to the element understand their individual responsibilities and that each soldier complies with all intelligence oversight regulations and laws.

(3) Appoints an Intelligence Professional with the appropriate security clearance and access as the Intelligence Oversight Monitor for the element or unit.

(4) Ensures that all appropriate training or education under this regulation occurs.

d. Major commands (I Corps Artillery, 97TH Troop Command, 300th MI BDE, 19th SF Group, 115th Engineer GP, 211th Aviation Group, 151st Refueling Wing), Counterdrug Program, 640th RTI, and 169th Intelligence Squadron will:

(1) Publish and maintain an updated IO SOP.

(2) Monitor subordinate units/activities to ensure compliance with appropriate IO regulations and directives.

(3) Appoint a unit/activity IO monitor and alternate. Forward copies of orders to J-2 and IG within 15 days of change in IO monitor assignment. It is recommended that one monitor be a full-time member to facilitate quarterly reports and questionable activity reports.

(4) Maintain a current copy of all subordinate IO monitors/assistants appointment orders.

(5) Provide a quarterly report describing any actions taken relative to "questionable activities" previously reported, significant oversight activities, and intelligence oversight training accomplished during the quarter and any suggestions for improvement in the oversight system.

(a) Reports are due on the last day of each quarter.

(b) Negative reports are required.

(c) Email is a valid medium for submitting these reports.

(d) Reports will be submitted simultaneously to the J-2 and IG to ensure proper and timely reporting.

(5) Ensure a training program is in place to ensure all individuals involved in intelligence activities are familiar with procedures 1-4, 14 and 15, DoD 5240.1-R.

(6) Comply with program guidance outlined in Chapter 2 below.

(7) Establish and publicize a clearly defined reporting channel for "questionable activities." See Appendix A

(8) Ensure that there is legal review of intelligence activities and intelligence training activities to be conducted.

(9) Mitigate risks involved in intelligence or intelligence training activities to prevent questionable activities.

(10) Although not an intelligence unit the 101st Information Operation Flight will comply with sections 1-7 listed above.

Chapter 2
Guidance

2-100. Organization Inspections
Intelligence Oversight programs will be included within UTNGR 1-201, Organizational Inspection Programs (OIP) for all organizations listed in paragraph 1-200 d.

2-101. Intelligence Oversight Officer/Monitor
a. Each organization/activity identified in paragraph 1-200 d. will have additional duty orders on file that assign primary and alternate IO monitors responsible for its program.
b. IO monitors will provide IO training to newly assigned intelligence personnel to these organizations/activities as well as provide refresher training annually.

2-102. Training Guidance
IO program guidance will be included in each battalion/squadron and higher level commander's yearly training guidance and reflected on applicable subordinate units' yearly training calendars.

2-103. Intelligence Oversight Binder/Policy Book
Units and organizations listed in paragraph 1-200d.will maintain an IO Policy Book/Binder. This book will contain a copy of:
a. The applicable regulations/SOPs, training materials, and regulations.
b. Attendance rosters for personnel receiving initial and annual IO briefings.
c. Inspections conducted.
d. Additional duty orders.

2-104. Intelligence Oversight Inspections/Evaluations.
a. The J-2 will conduct appropriate staff visits to ensure that appropriate standards are met.
b. Commanders, as part of their staff and/or command inspection programs are encouraged to conduct IO inspections.
c. A typical evaluation/inspection guide is found at Appendix D. However, evaluations of some intelligence activities may require a more systemic review of IO programs.
d. Organizations/activities listed in paragraph 1-200 d. performing IO inspections will document the inspection and retain it as needed for follow-up or subsequent inspections.

2-105. Counterdrug Activities
a. CD activities providing intelligence data derived from translation of tapes recorded by federal, state, or local law enforcement agencies will not be retained in UTNG facilities.
(1) Tapes may be held until translated.
(2) Once translated, all associated materials will be immediately returned to the appropriate agency (within two working days).
b. Requisite Documentation for Counterdrug Activities.
(1) Supported law enforcement agencies (LEA) are responsible for obtaining the legal authorization required to permit information gathering. A Memorandum of Understanding (MOU) will be on file stating this responsibility falls upon the supported LEA. This MOU will

remain on file for a minimum of two years following the completion of CD support to the related LEA.

(2) The IG will review CD Support Plans to ensure they include a State Attorney General's certification that the plan has been reviewed and is legally permissible under state law.

2-106. Signals Intelligence Activities (SIGINT)

a. SIGINT collection activities in support of state missions under the direction of the Governor of the State of Utah will be authorized by The National Security Agency (NSA) or Department of Defense.

b. Organizations with SIGINT capabilities will comply with the requirements and prohibitions of all applicable United Stated Signal Intelligence Directives (USSID).

2-107. Imagery Intelligence (IMINT)

IMINT includes photographic, infrared, radar, and electro-optic images captured using ground or aerial based systems. These systems must not be targeted against US persons unless there is a specific authorized mission.

2-108. Counterintelligence (CI).

a. Army National Guard

(1) Units may conduct counterintelligence training consistent with these regulations.

(2) CI agents may participate in non-training CI activities while in a Title 10 status. The agent must be assigned to organization with its own specific authorization for CI collection to conduct intelligence collection.

(3) The Army Central Control Office (ACCO) exercises technical control, review, coordination and oversight of CI controlled activities. It is the only Army organization which can authorize CI activities within CONUS.

b. Air National Guard units/activities are not authorized to engage in independent domestic CI activity; to include training. (Paragraph 3.1.1., AFI 71-101)

c. Nothing in this regulation prohibits CI or other intelligence soldiers or airmen from assisting law enforcement when directed by DOD or while on state active duty orders in an emergency declared by the Governor of the State of Utah.

2-109. Reporting Procedures.

a. Employees or members of the Utah National Guard will report "questionable activities" through command channels or to the UT Inspector General immediately.

b. Units receiving "questionable activity" reports will report them through command channels to the UTNG Inspector General immediately. The Utah IG must forward questionable activity reports to NGB-IGI, within 5 days of discovery.

c. Utah National Guard reports of "questionable activities" will include the following as a minimum:

(1) Description of the nature of the "questionable activity."
(2) Date, time, and location of occurrence.
(3) Individual or unit responsible for the "questionable activity."
(4) Summary of the incident to include references to particular portions of DoD 5240.1-R.
(5) Status of the investigation of the incident.

d. Commanders will ensure that personnel are protected from harassment, reprisal, or retaliation for reporting a "questionable activity". Commanders or staff will never discourage or attempt to dissuade someone from filing a "questionable activity report".

2-110. Public Affairs.

a. Public disclosure of IO findings or documentation is expressly prohibited without the written permission of The Adjutant General in consultation with the J-2 and State IG.

b. When contemplating intelligence training exercises the Public Affairs Office may provide appropriate advice and assistance to help with any possible media perceptions.

2-111. Tenant Intelligence Units, Activities, and Staffs.

a. The Adjutant General may authorize external agencies and organizations to utilize UTNG facilities so far as they comport with Executive Order 12333, DoD 5240.1, and DoD 5240.1R.

b. Tenant agencies and organizations must vouchsafe to the UTNG that they have a viable IO program for their activities. These provisions will be included in all Memorandums of Understanding.

c. An annual report of all IO activities and inspections for the period 1 October through 30 September will be provided to the J-2 and the IG. This report is due no later than 15 October of each year.

2-112. Training.

a. Each Individual shall receive tailored unit training within 30 days of assignment or employment in an intelligence element. This training will be documented. The individual will acknowledge the briefing and certify familiarity with the basics of intelligence oversight.

b. Intelligence elements will ensure that each soldier receives an annual refresher brief intelligence oversight.

c. Refresher Training should be provided to deploying soldiers.

d. Signals Intelligence units will ensure that all soldiers receive training on applicable USSIDs from qualified individuals.

2-113. Joint Intelligence Activities.

Individuals assigned to joint activities or who are involved in joint training exercises must be familiar with DOD policies of the other organizations. Unless specified by the joint force commander, individuals will comply with the appropriate service component intelligence policies.

2-114. Intelligence Sharing

Nothing in this regulation precludes sharing information with appropriate military and civilian authorities. Information to be shared will be transmitted thru the unit chain of command to the J-2 and/or J-5 for timely distribution to civilian authorities. If transmitted to the J-2, the J-2 will forward to J-5 for timely distribution.

Chapter 3
Support to Force Protection

3-100. Threat Information Dissemination

The UTNG JDOMS and J-3 may receive and disseminate time-sensitive threat information regardless of source or type. As non-intelligence entities, they are not subject to the provisions of this regulation, but must comply with DODD 5200.27.

3-101. Law Enforcement Responsibilities.

a. Civilian Federal, State, and local law enforcement authorities have the primary responsibility and effort to protect U.S. military forces within the United States.

b. Efforts to collect, analyze, and disseminate U.S. criminal and domestic terrorism threat information are the primary jurisdiction of Federal, State, and local law enforcement agencies.

The proponent of this circular is UT-J2. Users are invited to make suggestions for improvement and submit directly to the proponent.

FOR THE COMMANDER-IN-CHIEF:

BRIAN L. TARBET
Major General, Utah NG
The Adjutant General

OFFICIAL:

PAUL D. HARRELL
COL, GS, UTARNG
Chief of Staff

DISTRIBUTION:
B

APPENDIX A

POSTERS

INTELLIGENCE OVERSIGHT

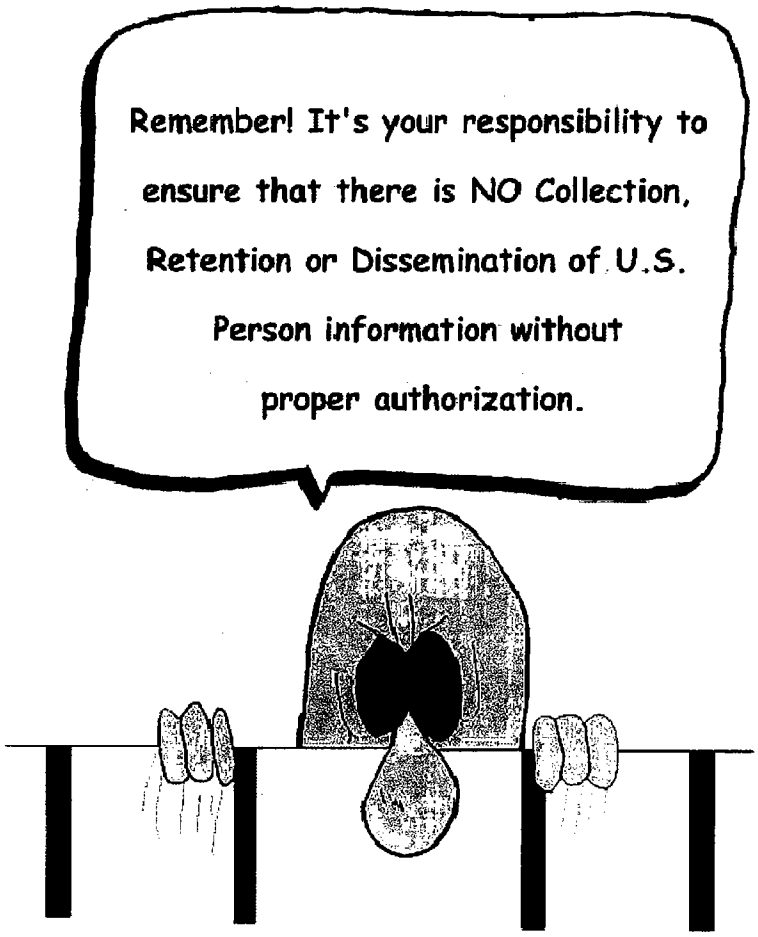

REPORT QUESTIONABLE ACTIVITIES UNDER PROCEDURE 15

Questionable Activity - Any conduct that constitutes or is related to an intelligence activity that may violate the law, any Executive Order or Presidential directive, including Executive Order 12333, or applicable DOD policy, including Army Regulation 381-10 and Air Force Instruction 14-104.

If you suspect a questionable activity or a federal crime has been committed, or if you have any questions, contact your unit Intelligence Oversight Monitor, The J-2 Office, or the State IG Office (801-523-4422):

YOUR UNIT INTELLIGENCE OVERSIGHT OFFICER IS:

YOUR UNIT ALTERNATE INTELLIGENCE OVERSIGHT OFFICER IS:

REPORT QUESTIONABLE ACTIVITIES UNDER PROCEDURE 15

Questionable Activity - Any conduct that constitutes or is related to an intelligence activity that may violate the law, any Executive Order or Presidential directive, including Executive Order 12333, or applicable DOD policy, including Army Regulation 381-10 and Air Force Instruction 14-104.

If you suspect a questionable activity or a federal crime has been committed, or if you have any questions, contact your unit Intelligence Oversight Monitor, The J-2 Office, or the State IG Office (801-523-4422):

YOUR UNIT INTELLIGENCE OVERSIGHT OFFICER IS:

YOUR UNIT ALTERNATE INTELLIGENCE OVERSIGHT OFFICER IS:

APPENDIX B

PROCEDURE 15 GUIDE AND FLOW CHART

1. **AR 381-10 Procedure 15 Flow Chart**

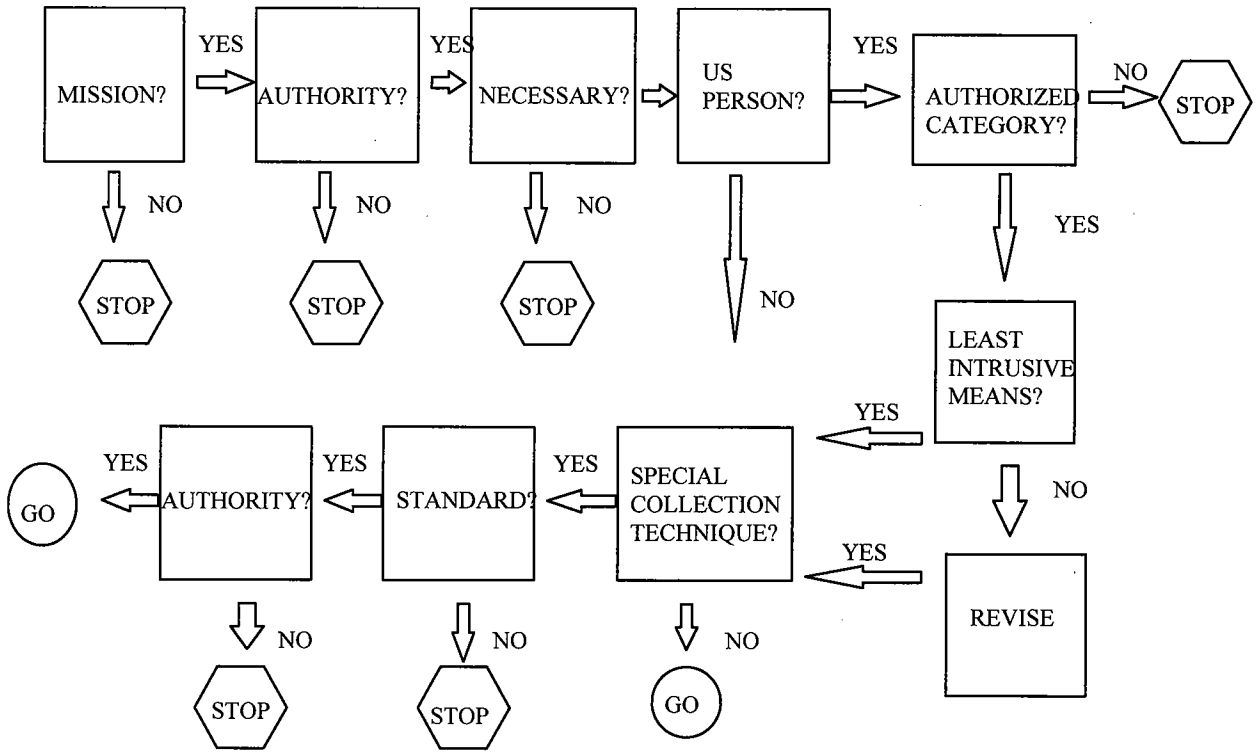

APPENDIX C

Utah National Guard
Intelligence Oversight Inspection/Evaluation

UNIT	INSPECTOR	DATE:

(Must be in compliance with 12 of the 14 inspection items to include items 4, 8, 9, and 10.)

Inspection Item		Yes	No
1. Does the organization/unit have additional duty orders on file appointing primary and alternate Intelligence Oversight (IO) monitors?			
2. Do unit personnel performing intelligence duties know the identity of the IO monitors?			
3. Does the unit maintain a current copy of the applicable regulations noted below?			
DoD Publications			
DoD 5240.1	DoD Intelligence Activities (25 April 1988)		
DoD 5240.1-R	Procedures Governing DoD Intelligence Component Activities (Dec 1982)		
Army Publications (ARNG entities only)			
AR 381-10	US Army Intelligence Activities (22 November 2005)		
AR 381-20	The Army Counterintelligence Programs (15 November 1993)		
Air Force Publications (ANG entities only)			
AFI 14-104	Conduct of Intelligence Activities (14 April 2005)		
AFI 14-105	Intelligence Mission Responsibilities (3 Jun 2002)		
AFI 90-201	Inspector General Activities (22 Nov 2004)		
National Guard Publications			
NGR 20-10	IG Intelligence Oversight Procedures (15 September 1995)		
NGR 500-1/ANGI 10-8101	Military Support to Civil Authorities (01 February 1996)		
NGR 500-2/ANGI 10-801	National Guard Counterdrug Support (31 March 2000)		
UTNGR 381-10/14-104	Intelligence Oversight Program Guidance		
4. Has a unit SOP been established to ensure members do not engage in unauthorized intelligence activities?			
a. Does it parallel AR 381-10/AFI 14-104?			
b. Does it identify the IO monitors?			
5. Do unit personnel have access to the SOP and applicable regulations?			
6. Does the unit participate in any activity that collects, analyzes, retains, or disseminates information concerning US persons?			
a. If so, is it valid military support to civil authority missions, support of counterdrug missions, or other properly authorized missions? (These are the only three circumstances under which it could be authorized.)			
b. Is there a criminal threat?			
c. Is the activity taking place within a National Guard facility? (Only properly authorized activities, which could result in use of information on US persons, may be performed in NG facilities. For example, tapes recorded by Law Enforcement Agencies (LEA) may be temporarily retained until translated, and then must be promptly returned to the supported LEA. No further analysis beyond simple translation may beperformed.)			
7. Are IO briefings scheduled on the Yearly Training Calendar (YTC)?			

8. Do intelligence personnel receive initial and annual IO training/briefings?		
9. Does the unit document attendance at IO training using by name rosters?		
10. Has the unit clearly established the Procedure 15 reporting channel?		
a. Is it posted on the unit bulletin board?		
b. Are unit personnel aware of the reporting chain? determine if personnel are aware that using the chain of command for reporting "questionable activities" is encouraged where feasible. (Randomly poll members of the unit.)		
11. Is IO part of the commander's Organizational Inspection Program (OIP)? (Battalion/Squadron level and higher.)		
12. Do units have a prepared IO briefing? (Slides, Web-based Training, Power Point Presentation, etc.)		
13. Determine if unit members and staff personnel are aware of the applicability of intelligence oversight limitations to them.		
14. Determine if unit members and staff personnel are aware of the circumstances under which intelligence can be collected, retained, and disseminated on US persons.		
15. Determine if unit members and staff personnel are aware that there are specific procedures and restrictions governing the collection of intelligence on US persons by methods such as electronic surveillance or physical surveillance.		
16. Determine if unit members and staff personnel are aware that there are specific procedures and restrictions on providing intelligence support to law enforcement agencies.		
17. Determine if unit members and staff personnel are aware that they are required to report "questionable activities" conducted by intelligence components that constitute possible violations of law, directive, or policy.		
18. Determine if unit members and staff personnel understand that "US Person" pertains to associations, corporations, and resident aliens as well as US citizens.		
19. Determine if unit member and staff personnel are aware of AR 381-10 or AFI 14-104 and DOD 5240.1-R as key intelligence oversight authorities.		
20. Do the unit's IO monitors know the IO web sites? http://www.defenselink.mil/atsdio/ http://www.dami.army.pentagon.mil/offices/dami-ch/io/io_home.html		
20. For units performing counterintelligence missions, what procedures are used to coordinate missions with the POTO, LEA or others involved?		
Overall Result of the Inspection:	**Pass**	**Fail**

Reinspection date for non-compliance:

_____ _____

Signature of IO Monitor **Date**

Item #	Remarks: