Department of the Army
Pamphlet 385–63

Safety

Range Safety

Headquarters
Department of the Army
Washington, DC
10 April 2003

UNCLASSIFIED

SUMMARY of CHANGE

DA PAM 385-63
Range Safety

This new pamphlet implements the requirements of AR 385-63 and other directives. It covers the minimum range safety standards and procedures for the design, management, and execution of range safety programs. This pamphlet--

- Prescribes installation and unit--level range safety program guidelines (para 1-6).
- Prescribes criteria for range safety certification (para 1-7).
- Provides standards and procedures for range access and control (chap 2).
- Provides safety standards for indoor ranges (para 2-6).
- Provides guidance on the positioning and issuing of ammunition and explosives on ranges and other related ammunition topics (chap 3).
- Provides bat wing surface danger zone criteria for various weapons and weapon systems (app B).
- Provides guidance on surface danger zone design (app C).

Headquarters
Department of the Army
Washington, DC
10 April 2003

Department of the Army Pamphlet 385–63

Safety

Range Safety

By Order of the Secretary of the Army:

ERIC K. SHINSEKI
General, United States Army
Chief of Staff

Official:

JOEL B. HUDSON
Administrative Assistant to the
Secretary of the Army

History. This is a new Department of the Army pamphlet.

Summary. The Army and Marine Corps will use this pamphlet in conjunction with Army Regulation 385–63/Marine Corps Order 3570.1B, to establish and maintain a comprehensive range safety program.

Applicability. The standards and procedures in this pamphlet apply to all personnel and range operations and activities on Army or Marine Corps controlled property or within Army or Marine Corps jurisdiction. The provisions of this pamphlet apply in peacetime and contingency operations and are advisory for actual combat operations. Except for airspace and water traffic safety requirements, these provisions do not apply to development, proof and function test ranges, or laboratories. However, major Army commands and Marine Corps installations having such ranges and laboratories are required to develop and apply alternate standards that are appropriate to the mission and that ensure the preservation of life and property.

Proponent and exception authority. The Chief of Staff, Army, is the Army proponent. The proponent has the authority to approve exceptions to this pamphlet consistent with controlling law and regulation. The proponent has delegated approval authority to the Director of Army Safety.

Suggested improvements. Army users are invited to send comments and suggested improvements on DA Form 2028 (Recommended Changes to Publications and Blank Forms) directly to the Director of Army Safety, Office of the Chief of Staff, DACS–SF, 200 Army Pentagon, Washington, DC 20310–0200. Marine Corps users will submit comments and suggestions for improvements to the Commanding General, Marine Corps Combat Development Command (C46R), 3300 Russell Road, Quantico, VA 22134–5001.

Distribution. This publication is available to Army users in electronic media only and is intended for command levels A, B, C, D, and E for the Active Army, the Army National Guard of the United States, and the U.S. Army Reserve. Publication and distribution to authorized users for Marine Corps commands are indicated in the Table of Allowances for Publications.

Contents (Listed by paragraph and page number)

Chapter 1
Introduction, *page 1*
Purpose • 1–1, *page 1*
References • 1–2, *page 1*
Explanation of abbreviations and terms • 1–3, *page 1*
Applicability • 1–4, *page 1*
Deviations • 1–5, *page 1*
Installation and unit level Range Safety Program guidelines • 1–6, *page 2*
Guidelines for range safety certification programs • 1–7, *page 7*

Chapter 2
Ranges, *page 8*
Restricting access to impact areas • 2–1, *page 8*
Posting warning signs and markers • 2–2, *page 8*
Controlling other range usage • 2–3, *page 9*

UNCLASSIFIED

Contents—Continued

Coordinating use of special use airspace • 2–4, *page 9*
Coordinating use of navigable waterways • 2–5, *page 11*
Safety requirements for indoor firing ranges • 2–6, *page 11*

Chapter 3
Ammunition, *page 13*
Smoking • 3–1, *page 13*
Positioning and issuing ammunition and explosives • 3–2, *page 13*
Qualification and restriction of ammunition and explosives • 3–3, *page 14*
Suspension of ammunition and explosives involved in malfunctions • 3–4, *page 15*
UXO and misfire procedures and reporting • 3–5, *page 16*
Disposition of ammunition and explosives involved in malfunctions and accidents • 3–6, *page 16*
Destruction of UXO • 3–7, *page 16*
Policing the training complex • 3–8, *page 16*
Army requirements for areas known to contain ICMs and submunitions • 3–9, *page 17*

Chapter 4
Firing, *page 20*
Special firing instructions • 4–1, *page 20*
Warning signs and signals • 4–2, *page 20*
Firing conditions for ADA guided missiles and rockets • 4–3, *page 20*
Firing conditions for antitank guided missiles and rockets • 4–4, *page 21*
Safety requirements for firing aerial pyrotechnics (Marine Corps only) • 4–5, *page 21*

Chapter 5
Targets, *page 21*
General requirements for moving targets • 5–1, *page 21*
Airborne and ground targets • 5–2, *page 21*
Waterborne targets • 5–3, *page 21*
Radio controlled targets • 5–4, *page 22*
Aerial targets • 5–5, *page 22*
Ballistic aerial targets • 5–6, *page 22*

Chapter 6
Small Arms, *page 24*
Firing conditions • 6–1, *page 24*
Overhead fire • 6–2, *page 24*
Flanking fire • 6–3, *page 25*
Shotgun ranges • 6–4, *page 25*
Surface danger zone • 6–5, *page 27*
Blank ammunition • 6–6, *page 27*
Recreational ranges • 6–7, *page 27*

Chapter 7
Grenades and Grenade Launchers, *page 27*
Hand grenades • 7–1, *page 27*
Grenade launchers and grenade machineguns • 7–2, *page 29*

Chapter 8
Antitank Rockets, *page 34*
Firing conditions • 8–1, *page 34*
Surface danger zone • 8–2, *page 34*

Chapter 9
Recoilless Weapons, *page 42*
Firing conditions • 9–1, *page 42*

Contents—Continued

Surface danger zone • 9–2, *page 42*

Chapter 10
Mortars, *page 47*
Firing conditions • 10–1, *page 47*
Surface danger zones • 10–2, *page 47*

Chapter 11
Field Artillery, *page 49*
Procedures and precautions • 11–1, *page 49*
Safety certification program • 11–2, *page 49*
Field artillery cannons • 11–3, *page 49*
Field artillery cannon SDZs • 11–4, *page 50*
Antipersonnel ammunition (beehive) • 11–5, *page 56*
Cannon launched guided projectile (Copperhead) • 11–6, *page 58*
Flight corridors • 11–7, *page 62*
Improved conventional munitions • 11–8, *page 64*
Field artillery trainer • 11–9, *page 65*
Multiple launch rocket system (MLRS) • 11–10, *page 69*
MLRS reduced range practice rocket • 11–11, *page 72*

Chapter 12
Tank/Fighting Vehicle Gunnery, *page 76*
Tank cannon firing conditions • 12–1, *page 76*
Surface danger zone • 12–2, *page 76*
Fighting vehicles • 12–3, *page 84*
Subcaliber tank gunnery devices • 12–4, *page 89*
Grenade launchers • 12–5, *page 89*
Weapons effect signature simulator • 12–6, *page 93*
Hazardous impulse noise exposure • 12–7, *page 93*
Firing vehicle status designations • 12–8, *page 96*
Close support of ground personnel in live-fire exercises • 12–9, *page 97*

Chapter 13
Aviation Gunnery, *page 97*
Firing operations, general requirements • 13–1, *page 97*
Firing conditions, general procedures • 13–2, *page 97*
Gunnery operations • 13–3, *page 98*
Surface danger zones • 13–4, *page 98*
HELLFIRE antitank guided missile (semiactive laser) • 13–5, *page 102*
Stinger guided missile • 13–6, *page 108*

Chapter 14
Air Defense Artillery Weapon Systems, *page 108*
General • 14–1, *page 108*
Firing conditions, general requirements • 14–2, *page 108*
Air defense artillery target missiles • 14–3, *page 109*
Redeye guided missile (Army) • 14–4, *page 109*
Stinger guided missile • 14–5, *page 110*
Chaparral guided missile • 14–6, *page 114*
Patriot guided missile • 14–7, *page 115*
Improved Hawk guided missile (Army) • 14–8, *page 117*
Trajectory corridor • 14–9, *page 121*

Contents—Continued

Chapter 15
Antitank Guided Missiles, *page 121*
TOW missiles • 15–1, *page 121*
DRAGON and DRAGON generation II guided missiles • 15–2, *page 134*
JAVELIN Guided Missile • 15–3, *page 139*

Chapter 16
Chemical Agents and Smokes, *page 142*
Chemical agents • 16–1, *page 142*
Riot control agents • 16–2, *page 142*
Smoke • 16–3, *page 143*
Smoke pots • 16–4, *page 143*
Oil smoke candles • 16–5, *page 144*
Chloroacetophenone • 16–6, *page 144*

Chapter 17
Mines, Firing Devices, Trip Flares, Simulators, and Explosive Charges, *page 144*
General • 17–1, *page 144*
Firing devices • 17–2, *page 147*
Shaped charges • 17–3, *page 149*
Bangalore torpedoes • 17–4, *page 149*
Mine-clearing snakes • 17–5, *page 150*
Blast-driven earth rod • 17–6, *page 150*
Mine-clearing line charge • 17–7, *page 150*
Cratering charges • 17–8, *page 153*
Mines • 17–9, *page 154*
Firing devices • 17–10, *page 157*
Trip flares, M48, and M49 • 17–11, *page 157*
Simulators • 17–12, *page 158*
Training conducted in explosive entry techniques (USMC) • 17–13, *page 158*

Chapter 18
Laser Range Safety, *page 159*
Fundamentals • 18–1, *page 159*
Range usage • 18–2, *page 160*
Force on Force tactical exercises • 18–3, *page 160*

Chapter 19
Live-Fire Exercises, *page 161*
Safety during live-fire exercises • 19–1, *page 161*
Information for commanders • 19–2, *page 161*
Exercise planning • 19–3, *page 161*
Firing precautions • 19–4, *page 162*
Fire control • 19–5, *page 163*
Maneuver in temporary impact areas • 19–6, *page 163*
Air support • 19–7, *page 164*

Appendixes

A. References, *page 165*

B. Bat Wing Surface Danger Zones, *page 172*

C. Surface Danger Zone Design, *page 180*

Contents—Continued

Table List

Table 1–1: OIC/RSO appointment requirements, *page 4*
Table 2–1: Breathing zone exposure limits for intermittent atmospheric lead exposures, *page 11*
Table 5–1: Ballistic aerial target system surface danger zone, *page 22*
Table 6–1: Minimum thickness of material for positive protection against caliber ammunition listed, *page 24*
Table 7–1: Surface danger zone dimensions for 40-mm machinegun, MK19, MOD3, *page 32*
Table 8–1: Antitank rocket launcher SDZ criteria, in meters, *page 34*
Table 8–2: Maximum ranges at various quadrant elevations (QE) for the 35-mm M73 practice rocket, *page 35*
Table 8–3: RAAWS/MAAWS SDZ criteria, in meters, *page 37*
Table 8–4: AT–4 surface danger zone criteria, in meters, *page 40*
Table 9–1: Recoilless rifles surface danger zone criteria (in meters), *page 43*
Table 9–2: Distances required for firing antipersonnel cartridges at quadrant elevations of 15° or less, *page 43*
Table 10–1: Mortar surface danger zone criteria, in meters[1, 2, 3], *page 47*
Table 10–2: Basic impact area dimensions, *page 49*
Table 11–1: Basic impact area dimensions, *page 51*
Table 11–2: Field artillery cannon SDZ criteria, in meters, *page 55*
Table 11–3: Heights of burst above occupied armor vehicles, in meters, *page 56*
Table 11–4: Beehive SDZ criteria, in meters, *page 57*
Table 11–5: Maximum range data sources for ICM munitions, *page 64*
Table 11–6: Secondary danger zones (*A*, *B*, and *C*) for ICM munitions, *page 64*
Table 11–7: Submissile drift factors for ICM munitions, *page 65*
Table 11–8: Field artillery trainer SDZ criteria, in meters, *page 66*
Table 11–9: Multiple Launch Rocket System SDZ criteria, in meters, *page 69*
Table 11–10: MLRS M28A1 reduced-range practice rocket SDZ criteria, in meters, *page 75*
Table 12–1: General tank cannon cartridge SDZ criteria, in meters, *page 76*
Table 12–2: Select tank cannon cartridge SDZ criteria, *page 78*
Table 12–3: DM 128 (M 901), TPCSDS–T, 105-mm cartridge SDZ criteria corresponding to target engagement distances, *page 80*
Table 12–4: SDZ criteria for firing M968, 35-mm TPGID cartridge corresponding to target ranges, in meters, *page 83*
Table 12–5: 25-mm SDZ criteria, in meters, *page 84*
Table 12–6: Subcaliber devices SDZ criteria, in meters, *page 89*
Table 12–7: Exposure limits to hazardous impulse noise from tank 105-mm main gun cartridges (per 24 hours), *page 94*
Table 12–8: Exposure limits to hazardous impulse noise from tank main gun for selected 120-mm cartridges (per 24 hours), *page 94*
Table 12–9: Hazardous impulse noise contours for various tank cannon cartridges, *page 95*
Table 13–1: Aerial rocketry surface danger zone criteria, in meters, *page 98*
Table 14–1: Improved Hawk corridor dimensions, *page 120*
Table 15–1: Basic TOW, improved TOW, TOW 2, AND TOW 2A missile range distances, *page 124*
Table 15–2: Basic TOW, improved TOW, TOW 2, AND TOW 2A missile danger areas, *page 124*
Table 15–3: TOW 2B missile distances, *page 124*
Table 15–4: TOW 2B Danger Areas, *page 124*
Table 15–5: DRAGON and DRAGON generation II missile SDZ criteria (in meters), *page 134*
Table 17–1: Dimensions of sand cushion, *page 145*
Table 17–2: Safe distances for personnel (near bare charges), *page 146*
Table 17–3: Dimensions of sand cushion, *page 147*
Table 17–4: Minimum safe distances between RF transmitters and electric blasting operations, *page 148*
Table 17–5: Minimum safe distances between TV and FM broadcast transmitters and electric blasting operations, *page 148*
Table 17–6: Minimum safe distances between mobile RF transmitters and electric blasting operations, *page 148*
Table B–1: SDZs for direct-fire weapons without explosive projectiles, *page 175*
Table B–2: SDZs for direct-fire weapons with explosive projectiles, *page 176*
Table B–3: SDZ dimensions for Range Antiarmor Weapons System (RAAWS)/Multirole Antiarmor, *page 176*

Contents—Continued

Table B–4: SDZ criteria cal .50, saboted light armor penetrator (SLAP) M903 (sand and steel media), *page 178*
Table B–5: SDZ criteria cal .50, saboted light armor penetrator-tracer (SLAP–T) M962 (sand and steel media), *page 179*
Table B–6: SDZ Criteria cal .50, MK211 (sand and steel media), *page 179*

Figure List

Figure 5–1: SDZ for firing ballistic aerial target systems, *page 23*
Figure 6–1: SDZ for firing small arms, machineguns, and shotguns firing at a fixed ground target, *page 26*
Figure 7–1: SDZ for fragmentation and offensive hand grenades, *page 29*
Figure 7–2: SDZ for firing M79 and M203 grenade launchers, *page 31*
Figure 7–3: SDZ for 40-mm machinegun, MOD 3, *page 33*
Figure 8–1: SDZ for firing rocket launchers, *page 36*
Figure 8–2: SDZ for firing RAAWS, *page 38*
Figure 8–3: SDZ, area *F* for firing RAAWS, *page 39*
Figure 8–4: SDZ for firing AT–4, *page 41*
Figure 8–5: SDZ, area *F* for firing AT–4, *page 42*
Figure 9–1: SDZ for firing recoilless rifles firing at quadrant elevation of 15° or more, *page 44*
Figure 9–2: SDZ for firing recoilless rifles firing at quadrant elevation less than 15°, *page 45*
Figure 9–3: Surface danger zone for firing recoilless rifles firing antipersonnel cartridges at quadrant elevations of 15° or less, *page 46*
Figure 10–1: SDZ for firing mortars, *page 48*
Figure 11–1: SDZ for firing field artillery cannon in the indirect mode at fixed ground targets, *page 52*
Figure 11–2: SDZ for firing field artillery cannon in the indirect mode at moving ground targets, *page 53*
Figure 11–3: SDZ for firing field artillery cannon in the direct mode at fixed ground targets, *page 54*
Figure 11–4: SDZ for firing field artillery cannon with beehive ammunition in the direct mode at fixed or moving ground targets, *page 58*
Figure 11–5: SDZ for firing Copperhead in the ballistic mode, *page 60*
Figure 11–6: SDZ for firing Copperhead in the glide mode, *page 61*
Figure 11–7: Flight corridor for field artillery cannon fire over aircraft, *page 62*
Figure 11–8: An example of an established flight corridor, *page 63*
Figure 11–9: SDZ for firing field artillery trainer, *page 68*
Figure 11–10: SDZ for firing multiple launch rocket system, *page 70*
Figure 11–11: SDZ for firing multiple-launch rocket system M28A1 reduced-range practice rocket, *page 71*
Figure 11–12: MLRS reduced-range practice rocket area *F*, *page 73*
Figure 11–13: Formulas for determining risk of RRPR overhead fire, *page 75*
Figure 12–1: SDZ for firing general tank cannon cartridges, *page 77*
Figure 12–2: SDZ for firing select tank cannon cartridges, *page 79*
Figure 12–3: SDZ for firing 25-mm cannon cartridges, *page 86*
Figure 12–4: SDZ for Bradley fighting vehicle firing port weapon systems, *page 87*
Figure 12–5: 25-mm Sabot discard hazard area, *page 88*
Figure 12–6: SDZs for firing L8A1/A3 grenades, *page 90*
Figure 12–7: SDZs for firing grenades from M176, M226, and M239 grenade launchers, *page 91*
Figure 12–8: SDZs for firing M81 grenade, using standard 66-mm launchers on armored vehicles, *page 92*
Figure 12–9: SDZs for firing M82 grenades, using standard 66-mm launchers on armored vehicles, *page 93*
Figure 12–10: Hazardous impulse noise (140 dBP) contour zones, *page 96*
Figure 13–1: SDZ for firing aerial rocketry at ground targets, *page 100*
Figure 13–2: Rear blast area for hover firing and loading or unloading aerial rockets, *page 101*
Figure 13–3: SDZ for firing HELLFIRE laser-guided missile in direct launch at fixed target (lock-on after launch autonomous or lock-on before launch with remote designation), *page 103*
Figure 13–4: SDZ for firing HELLFIRE laser-guided missile in the indirect launch (lock-on after launch with remote designation) at fixed target, *page 104*
Figure 13–5: Designator zones for use with HELLFIRE laser-guided missile SDZ, *page 105*
Figure 13–6: Maximum designation angle for HELLFIRE missile laser designators, *page 107*
Figure 14–1: SDZ for firing Redeye guided missile at moving targets, *page 110*

Contents—Continued

Figure 14–2: SDZ for firing Stinger guided missile at moving targets, *page 111*
Figure 14–3: SDZ, area *F*, for firing Stinger guided missile, *page 113*
Figure 14–4: SDZ, area *F*, for firing Chaparral guided missile at a point in space, *page 115*
Figure 14–5: SDZ for firing Patriot missile, *page 116*
Figure 14–6: SDZ for improved Hawk guided missile firing at a point in space, *page 118*
Figure 14–7: Typical trajectory corridor, *page 119*
Figure 15–1: SDZ for firing basic TOW, improved TOW, TOW 2A, and TOW 2B missiles with a 1:1,000,000 probability of escapement, *page 123*
Figure 15–2: SDZ, area *F*, for firing basic TOW, improved TOW, TOW 2A, and TOW 2B missiles, *page 125*
Figure 15–3: SDZ for firing basic TOW, improved TOW, TOW 2A, and TOW 2B missiles with a 1:100,000 probability of escapement, *page 127*
Figure 15–4: SDZ for firing basic TOW, improved TOW, TOW 2A, and TOW 2B missiles with a 1:10,000 probability of escapement, *page 128*
Figure 15–5: SDZ for firing basic TOW, improved TOW, TOW 2A, and TOW 2B missiles with a 1:1,000 probability of escapement (requires an approved request for deviation), *page 129*
Figure 15–6: SDZ adjustments for firing basic TOW, improved TOW, TOW 2A, and TOW 2B missiles in a ground or aerial launch mode, *page 131*
Figure 15–7: SDZ, area *F*, for ATWESS for TOW and DRAGON missiles, *page 133*
Figure 15–8: SDZ for firing DRAGON and DRAGON generation II missiles, *page 135*
Figure 15–9: SDZ, area *F*, for firing DRAGON and DRAGON generation II missiles, *page 136*
Figure 15–10: SDZ for Javelin missile, *page 138*
Figure 15–11: SDZ, area *F*, for Javelin missile, *page 140*
Figure 15–12: Primary danger zone, area *F*, extension for activation of Javelin missile flight motor pressure relief system, *page 141*
Figure 17–1: SDZ for firing mine-clearing line charge with the M58 HE charge, *page 151*
Figure 17–2: SDZ, area *F*, and fragmentation zone for firing mine-clearing line charge with M58 HE charge, *page 152*
Figure 17–3: SDZ for firing mine-clearing line charge with the M68 inert charge, *page 153*
Figure 17–4: SDZ for firing Claymore mines, *page 155*
Figure 17–5: Air-volcano SDZ, *page 156*
Figure 17–6: Volcano dispenser SDZ ground, *page 157*
Figure B–1: SDZ for direct-fire weapons without explosive projectiles, *page 173*
Figure B–2: SDZ dimensions for direct-fire weapons with explosive projectiles, *page 174*
Figure B–3: SDZ dimensions for .50 cal SLAP M903, SLAP–T M962, and MK211API ammunition, *page 177*
Figure B–4: SDZ dimensions for .50 cal SLAP M903 and SLAP–T M962 ammunition Sabot discard hazard area, *page 178*
Figure C–1: SDZ dimensions for direct-fire weapons with explosive projectiles, *page 181*
Figure C–2: Indirect fire SDZ, *page 182*
Figure C–3: Ballistic footprint and associated SDZ, *page 183*
Figure C–4: Gun target line, *page 184*
Figure C–5: Dispersion area angles, *page 185*
Figure C–6: Dispersion area, *page 186*
Figure C–7: Tic marks for distance *Y*, *page 186*
Figure C–8: Addition of angles *P* and *Q*, *page 187*
Figure C–9: Completion of area *W*, *page 188*
Figure C–10: Addition of areas *A* and *B*, *page 189*
Figure C–11: Single firing position, target array, *page 190*
Figure C–12: Completion of SDZ, *page 190*
Figure C–13: Multiple firing positions, *page 191*
Figure C–14: CALFEX, *page 192*

Glossary

Chapter 1
Introduction

1–1. Purpose

This pamphlet provides implementation guidance for the Army and Marine Corps (MC) Range Safety Programs prescribed in Army Regulation (AR) 385–63 and Marine Corps Order (MCO) 3570.1B. It provides standards and procedures for the safe firing of ammunition, demolitions, lasers, guided missiles, and rockets for training, target practice, and, to the extent practicable, combat.

1–2. References

Required and related publications and prescribed and referenced forms are listed in appendix A.

1–3. Explanation of abbreviations and terms

Abbreviations and special terms used in this pamphlet are explained in the glossary.

1–4. Applicability

a. This pamphlet applies to—

(1) The Active Army, United States Military Academy, the Army National Guard of the United States, U.S. Army Reserve, Department of the Army civilian employees, and contractors.

(2) Army Reserve Officers Training Corps during range or firing activities located on or within the jurisdiction of a military installation.

(3) Marine Corps commands active and reserve, unless the standards or procedures conflict with Department of the Navy or Headquarters, Marine Corps (HQMC) orders. Local standing operating procedures (SOP) and range policies will reinforce this pamphlet and AR 385–63/MCO 3570.1B.

(4) Range training and target practice activities.

(5) Military real estate areas that are being or have been used as bombing ranges, artillery impact areas, target areas, and other areas exposed to contamination by military munitions, chemicals, pyrotechnics, or other dangerous materials.

(6) All areas designated for live-fire weapons firing and laser training, including recreational ranges, located on Army- or Marine Corps-controlled property.

(7) Civilian training complexes when authorized for Army or Marine Corps active and reserve use.

b. The standards and procedures of this pamphlet are advisory for actual combat conditions.

c. This pamphlet also applies to training outside U.S. territories. U.S. Army or Marine Corps installation commanders will apply the provisions of this pamphlet or host nation agreements as appropriate.

d. Surface danger zones (SDZs) in this pamphlet represent minimum safety requirements. They are adequate only when employed with properly functioning safety equipment and devices and when trained and competent personnel follow published firing procedures.

e. Except for airspace and water traffic safety requirements, the standards and procedures in this pamphlet do not apply to development, proof and function test ranges, and laboratories. However, major Army commands (MACOMs) that have such ranges and laboratories are required to develop and apply alternate standards that are appropriate to the mission and to ensure the preservation of life and property. To ensure range safety measures are adequate for protecting equipment and personnel, development, proof and function test ranges, and laboratories are required to submit an adjusted SDZ and base justification of adjusted SDZ on risk-mitigating measures, failure mode and effects analysis, inspection and test procedures (for example, x ray or functional component validation), analytical data (for example, Monte Carlo and Six Degrees of Freedom simulations), and empirical data from the same missile or missile with similar flight characteristics. The applicable activity commander will approve the adjusted SDZ.

1–5. Deviations

a. Deviations may be granted based on critical mission requirements that conflict with regulatory standards in accordance with AR 385–63/MCO 3570.1B. Deviations are limited to—

(1) Reducing SDZ dimensions when terrain, artificial barriers, or other compensating factors make smaller SDZs safe.

(2) Modifying prescribed firing procedures appropriate for a state of training of participating personnel to increase training realism.

(3) Allowing personnel who are not directly participating in the actual conduct of training within the SDZ.

b. Deviations applied to SDZs extending beyond installation boundaries must be based on the ability to contain projectiles, hazardous fragments, laser beams and both vertical and horizontal ricochet sufficiently within the installation boundaries, and areas under military control (for example, leased land or training areas and facilities acquired through Memorandum of Understanding or Memorandum of Agreement.) Probability of hazardous fragment escapement must not present a greater hazard than 1:1,000,000 (10^{-6})(unlikely) to the public.

c. As a minimum, all deviation authorizations will contain the following, as appropriate:

(1) Statement citing chapter, paragraph, and subparagraph of the specific condition requiring deviation, and the name and number of the firing range, training facility, or maneuver area involved.

(2) Description of the existing condition and anticipated hazards, subsequent hazard analysis, and risk analysis.

(3) Statement as to why a deviation is necessary and impact on training if not granted.

(4) Control measures taken to eliminate hazards and/or minimize risk and residual risk level.

(5) Installation and unit SOPs governing the specific firing range, training facility, or maneuver area for which the deviation applies.

(6) Scaled topographical map depicting standard SDZ and requested deviation.

(7) Map coordinates of the firing position, target location, and quadrant or elevation of fire, if required. The firing position, direction of fire, and SDZs will be plotted on the scaled map with distances shown in meters.

(8) Terrain profiles through the gun target line (GTL) and left and right limits of fire showing the relative elevation of the weapon system to be fired, the target, and natural terrain backstop or artificial barrier. A cross-sectional terrain profile showing the natural terrain backstop downrange will also be submitted. Terrain profiles only need to be drawn for the condition(s) requiring deviation and if profiles truly support justification for the deviation. Automated SDZ (ASDZ) trajectory profiles may be submitted in lieu of developing terrain profiles through manual means, if deemed appropriate by the installation commander. Risk-management principles will be applied in determining the applicability of alternate profiles.

d. Requests for deviation will originate from the unit or activity conducting the event, or the installation range control officer (RCO). Requests will be coordinated through the appropriate chain of command as needed and the installation safety office, which will provide final review to ensure risk-management steps are accomplished. The installation range control officer makes the initial judgment regarding the suitability of a proposed deviation prior to submission to the approving authority.

e. Deviations are valid for 1 year.

f. Deviations will not be applied to other Federal agency directives such as airspace or water traffic requirements.

g. MACOMs and Marine Forces may communicate directly with the Army Training and Doctrine Command (TRADOC) command safety office for technical information and guidance on risk management.

1–6. Installation and unit level Range Safety Program guidelines

a. The installation commander—

(1) Ensures the installation public affairs office (PAO) is included in planning and executing the installation Range Safety Program. The PAO assists in the education of on-post and off-post personnel to include school children (kindergarten through 12th grade) in the dangers of trespassing on ranges and training areas and handling unexploded ordnance (UXO).

(2) Develops procedures to ensure all release of information to the public news media is made through the installation PAO and in accordance with AR 360–1.

(3) Ensures warnings are issued at least 24 hours in advance, through the installation PAO, to the public news media before firing operations that may involve possible hazards to the general public.

(4) Prohibits use of alcohol and controlled substances in the training complex and prohibit any individual under the influence of alcohol or controlled substance entrance into the training complex.

(5) Ensures ammunition and explosives not expended during training are returned to the ammunition supply point (ASP), in the original packaging, when firing is completed or as directed by local policy.

(6) Complies with Military Handbook (MIL–HDBK) 828A, or Space and Naval Warfare Instruction 5100.12 and Marine Corps Order (MCO) 5104.1, and this pamphlet in establishing firing ranges, training facilities, and maneuver areas for laser use within the installation training complex.

(7) Appoints a senior range safety officer for air defense artillery (ADA) guided missile and large rocket firing exercises.

(8) Ensures an aggressive education program on the dangers of dud ammunition and other items of UXO is implemented.

b. The installation safety manager (Army)/installation range control officer (RCO)(Marine Corps)—

(1) Provides oversight responsibility for all range safety matters (Army) and is responsible for all range safety matters (Marine Corps).

(2) Evaluates the overall effectiveness of the Installation Range Safety Program annually to ensure the Range Safety Program is being implemented in accordance with AR 385–63/MCO 3570.1B and installation range regulations and procedures.

(3) Inspects the installation training complex semiannually and high-risk training operations quarterly to support safety in training missions.

(4) Reviews proposed local range safety policies and procedures.

(5) Reviews and comments on all high-risk and/or extremely high-risk assessments for training and operations on installation owned facilities and units.

(6) Assists the installation range control officer, PAO, and explosive ordnance disposal (EOD) officer as required in developing and implementing an on- and off-post range safety and dud awareness educational program targeted to children (kindergarten through 12th grade).

(7) Investigates or ensures range accidents are investigated by the appropriate command level and maintain records of accidents occurring within or originating from the installation training complex in accordance with AR 385–40 or MCO P5102.1, as appropriate.

(8) Reviews all range modification and construction proposals, designs, and plans.

(9) Participates in final range acceptance inspections following construction, renovation, or modification of facilities prior to any firing on the range (Army).

(10) Reviews all nonstandard range and training activities, to include the user-provided, risk- management documentation for those activities with high or extremely high residual risk.

(11) Reviews and make recommendations regarding the conduct of overhead fires.

(12) Monitors officer in charge (OIC) and range safety officer (RSO) training program effectiveness.

c. The installation RCO—

(1) Serves as the central point for control and coordination for all activities conducted within the installation training complex to ensure safety and unified operations.

(2) Coordinates safety issues with appropriate installation staff including the installation safety manager (Army). Coordinates range safety issues with appropriate installation staffs (Marine Corps).

(3) If authorized by the installation commander, withdraws or suspends installation training complex privileges from any person, organization, agency, or club that willfully violates this pamphlet or local range regulations and procedures; or from any person whose ability or conduct is incompatible with the safe use of Government range structures and facilities.

(4) Maintains and updates files of current and historical usage data on the installation training complex to include known hazards, type of ammunition expended on each range, dud accumulation and disposal records, and clearance status of temporary, dedicated and high hazard impact areas where available.

(5) Maintains original records of current and historical surface danger and airspace zone diagrams, weapon system safety data, firing limitations, and survey data for firing points and impact areas within the installation training complex boundaries.

(6) Approves, controls, and monitors personnel access into the installation training complex for both training and administrative activities. The RCO will be included in all range scheduling activities. If empowered by the installation commander, the RCO is the final authority regarding the use of training facilities and will be directly involved in all live-fire activities.

(7) For the Army only, before personnel access is granted to range impact areas, determines whether actual or suspected improved conventional munitions (ICMs)/submunitions contamination exists. The RCO, in coordination with installation safety and EOD representatives, determines if it is safe to permit personnel access and establish prerequisite precautions. Personnel permitted to enter any area known or suspected to contain ICMs or submunitions will be fully apprised of the potential dangers and the safeguards to be exercised. Additional actions required for ranges or other areas known to be contaminated by ICMs or submunitions are specified in chapter 3 of this pamphlet.

(8) Maintains current maps and overlays of training complex impact area boundaries, SDZ diagrams, and ground hazards for dissemination of information to installation training complex users.

(9) Establishes, maintains, and documents safety certification procedures for unit range OICs and RSOs. For artillery units, the commander provides the installation RCO a list of personnel who have successfully completed the unit certification program. The installation RCO ensures that all OICs and RSOs have received baseline education addressing the use of installation training complex facilities (for example, installation procedures for opening and closing facilities, communications requirements, MEDEVAC procedures, and so forth).

(10) Performs administrative and investigative duties related to the safe operation of ranges, training areas, and airspace.

(11) Assists the installation safety office and PAO in establishing and implementing an on- and off-post range safety and dud awareness educational program.

(12) Exercises oversight of unit range OIC and RSO training programs, and serve as the authority on suspension or termination of OIC/RSO certification (Army). Installation RCO will conduct all OIC/RSO certifications (Marine Corps).

(13) Exercises approval authority for the conduct of overhead fires when authorized by the installation commander. Approval is based on considering unit risk management documentation, maneuver plans, and the installation safety manager's recommendation.

(14) Coordinates as required with installation facilities engineers for maintenance of ranges and training facilities to provide safe operating conditions.

(15) If required, participates as a member of the installation range accident investigation team, providing weapons information and scenario input to the installation safety manager.

(16) Coordinates with local EOD, environmental, installation safety, and other involved staff organizations for clearance of unexploded ordnance as needed (Army). Coordinates with concerned staff for the clearance of unexploded ordnance as needed (Marine Corps). Marine Corps EOD does not have the mission for range clearance operations.

(17) Monitors effectiveness of training programs for OICs and RSOs.

(18) Develops and publish an installation/community range regulation.

(19) Ensures that appropriate explosives safety site plans are submitted for permanent ammunition and explosive storage and distribution facilities (except for 1.4 small caliber ammunition) on ranges. Note that there is no requirement for a site plan unless the storage/distribution facility is improved, such as building, covered concrete pad, and is used on a recurring basis.

d. The quality assurance specialist, ammunition surveillance (QASAS)—

(1) Ensures only ammunition certified and cleared in accordance with Technical Bulletin (TB) 9–1300–385 or NAVSEA TWO 24–AA–ORD–010 is issued for overhead fire of unprotected personnel.

(2) Ensures ammunition is stored, handled, and transported in accordance with applicable regulations, standards, and policies.

(3) Investigates and forwards malfunction reports in accordance with AR 75–1 and AR 385–40 or MCO P8025.1D, as appropriate. Acts as installation's coordinator for ammunition malfunctions, explosive accidents, and ammunition investigations.

(4) Provides using units with technical assistance concerning all aspects of ammunition and explosives.

(5) Provides ammunition liaison with range control office, installation safety office, logistics assistance office, EOD personnel, and training units.

e. Battalion/squadron commanders—

(1) Comply with the installation procedures for the certification of OIC/RSO/laser range safety officers (LRSOs) (Army).

(2) For commanders of field artillery battalions and larger field artillery units, establish and maintain an artillery safety training and certification program to train and qualify personnel in safety procedures for their specific areas of responsibility. Personnel who have not completed annual training and certification will not be appointed as OIC or RSO.

(3) Conduct risk management for all range operations.

f. The unit commander—

(1) Ensures compliance with this pamphlet, applicable technical manuals (TMs), field manuals (FMs), and Fleet Marine Force Manuals (FMFMs) (Marine Corps), installation range guidance, and applicable SOPs for safe training and firing for each weapon system within the command.

(2) Ensures all personnel within the command are briefed on and comply with installation range procedures and safety requirements including required personal protective equipment.

(3) Designates an OIC and RSO for each firing exercise and or maneuver in accordance with table 1–1. (Except as designated in paragraph 1–6*h*(1)(a), the RSO may have no additional duties during the firing exercise.)

Table 1–1
OIC/RSO appointment requirements

Weapon system	OIC[1]			RSO[1]		
	OFF	WO	NCO	OFF	WO	NCO
Practice hand grenades; subcaliber training devices; laser devices; firing devices; simulators & trip flares; small arms and machineguns	X	X	E6	X	X	E5
Chemical agents and smokes[2,6]	X	X	E6	X	X	E5
Aerial gunnery & air defense weapons; flamethrowers; live grenades, grenade launchers, and grenade machineguns; live mines & demolitions; tank & fighting vehicle cannons; recoilless rifles.	X	X	E7	X	X	E6
Field artillery[3]	X	X	E7	X	X	E6
Mortars	X	X	E6	X	X	E6[7]
ADA rockets and guided missiles.		X			X[4]	
Direct fire antitank rockets and missiles	X	X	E7	X	X	E6
Live-fire exercises using organic weapons, squad through company, battery, troop.	X	X	E7	X	X	E6

Table 1–1
OIC/RSO appointment requirements—Continued

Weapon system	OIC[1]			RSO[1]		
	OFF	WO	NCO	OFF	WO	NCO
Combined arms live-fire exercises using outside fire support, troop, battery, squad, platoon, company; or battalion and larger.[5]	X	X	E7	X	X	E6

Notes:
[1] Civilians in the grade of GS–07 or above may act as OIC, and GS–05 or above or equivalent as RSO. Civilian contractors may act as OIC/RSO when approved by the installation commander and in accordance with Contract SOW.
[2] OIC and RSO must be nuclear, biological, and chemical (NBC) qualified when conducting NBC or smoke training.
[3] Use of E7s as OICs is authorized only when approved by the installation commander. Duties of the RSO are normally performed by either the battery executive officer or platoon leader.
[4] SRSO will be a field grade officer, CW4 or CW5 (Army), or civilian in the grade of GS–12 or above.
[5] OIC will be a field grade officer for battalion or larger CALFEX.
[6] RSO for Marine Corps will be E6 or above for practice hand grenades, Chemical Agents and Smokes. The installation commander may allow E5 to act as RSO for practice hand grenades, Chemical Agents and Smokes.
[7] RSO for Marine Corps can be E5 for mortar training activities.

(4) Ensures personnel performing duties of OIC and RSO are certified in accordance with established installation safety certification program.

(5) Complies with range safety certification program guidance in paragraph 1–7 for OICs and RSOs to ensure they are—

(a) Competent and properly instructed in the performance of their duties.

(b) Knowledgeable in the weapon systems for which they are held responsible and in safe ammunition handling and use procedures.

(6) Develops SOPs for laser operations to include provision for immediate medical attention for personnel who incur eye or other overexposure to laser energy and reporting laser overexposure incidents in accordance with AR 385–40, TB MED 524, MIL–HDBK 828A, and MCO 5104.1.

(7) Applies risk management and develop controls and procedures for all phases of training events.

g. The OIC.

(1) Qualifications.

(a) Commissioned, warrant, or noncommissioned officer (NCO, U.S. Army), staff noncommissioned officer (SNCO, Marine Corps) or civilian (U.S. Army). NCOs serving as OIC will be in the grade as shown in table 1–1 at a minimum.

(b) OICs will be certified in the weapon systems for which they are responsible. For weapon systems equipped or dependent on lasers, the OIC will be knowledgeable of laser hazards and proper employment. The OIC holds responsibility and accountability for the conduct of the activity and the adherence to governing regulations and guidance. He/she must be able to fully influence the conduct of the event. For aviation weapons systems the OIC must be weapons systems knowledgeable.

(c) The OIC must have satisfactorily completed a range safety certification program. Marine Corps battalion/squadron commanders are responsible for establishing and maintaining a certification program for their OICs and RSOs commensurate to the assigned duties and responsibilities.

(2) Duties.

(a) Ensures the overall safe conduct of training and proper use of the installation training complex.

(b) Receives a range safety briefing from installation range control organization on use of the training complex.

(c) Ensures the RSO is physically present at the training site.

(d) Determines when it is safe to fire in accordance with applicable regulations and installation range requirements.

(e) Ensures receipt of final clearance to fire from range control.

(f) Ensures proper supervision of personnel performing misfire, hang-fire, and cook-off procedures.

(g) Ensures required communications are established and maintained.

(h) Ensures safe laser operations.

(i) Ensures adequate medical support is available.

(j) Ensures ammunition and explosives are properly handled, transported, stored, and accounted for within the training complex from the time of receipt to the time of expenditure or turn in.

(k) Ensures a written log is maintained of pertinent safety and control data concerning the operation of firing ranges, weapons training facilities, and maneuver areas, authorized operating times, impact areas entries and exits, and cease fire authorizations.

(l) Ensures plans for firing exercises and maneuvers are coordinated with range control.

(m) Ensures control of target areas to prohibit entry by unauthorized personnel.

(n) Ensures all ammunition malfunctions and accidents are reported to range control in accordance with AR 75–1 and AR 385–40 (Army), or MCO P5102.1 and MCO 8025.1 (Marine Corps).

(o) Ensures coordination and approval has been gained from the range control agency for all civilian personnel that will be entering the training site.

(p) Briefs the RSO on the duties to be performed in support of the training event. Clearly establish the requirement for the RSO to brief the OIC on the safety of the facility and unit, and the readiness to commence live-fire operations prior to the start of firing.

(q) Implements risk management in all phases of the training events.

h. The RSO.

(1) Qualifications.

(a) Commissioned officer, warrant officer, NCO (Army), SNCO (Marine Corps) or civilian. For field artillery applications, the position commander or OIC may assume RSO duties. Grade requirements will be in accordance with table 1–1. Personnel assigned as RSO will have no other duties during that period of training, except for aviation weapons systems training where instructor pilots may assume RSO duties. Assistant range safety officers (ARSO) may be appointed as required.

(b) Weapon system qualified.

(c) Certification of satisfactory completion of unit or installation range safety certification program.

(2) Duties.

(a) Receives range safety briefing from the installation range control organization on use of the ranges and training areas.

(b) Ensures before granting clearance to fire—

1. Weapons and personnel are properly positioned.

2. Authorized ammunition and explosives, to include proper charge, fuze, and fuze settings are used.

3. Firing settings and weapons systems are within prescribed safety limits and verified.

4. SDZ is clear of all unauthorized personnel.

5. Proper hearing protection is worn by personnel within noise hazard areas.

6. Proper eye protection is worn by personnel within eye hazard areas.

7. Permission is received from range control to commence training and live-fire operations.

8. Marine Corps RSOs (Hawk and Stinger) will comply with responsibilities listed in local SOPs.

(c) Prior to commencing live-fire operations, conducts final coordination with the OIC. This coordination will include a summary of checks, inspections, and actions that the RSO has completed, verification that required communications has been established, and that a "hot status" has been received from range control.

(d) Orders immediate cease-fire or check fire when any unsafe condition occurs.

(e) Is physically present at the training site.

(f) Reports all accidents and ammunition malfunctions to the range OIC.

(g) Verifies, upon completion of firing or firing order, to the OIC that all weapons and weapons systems are clear and safe before allowing the removal of weapons from the firing area.

(h) During laser operations—

1. Ensures unit personnel employing lasers receive thorough safety briefings to include explanations of specific laser related hazards, safety equipment, and detailed range safety procedures, and comply with procedures in chapter 18 of this pamphlet.

2. Knows and observes horizontal and vertical safety limits of the laser range.

3. Follows unit SOPs for laser operations and training exercises.

4. Ensures all personnel engaged in laser operations, to include personnel in target areas, maintain continuous communications.

5. Ceases laser operations immediately if communications or positive control of the laser beam is lost.

6. Allows the LRSO, as required, to serve as the RSO.

(i) During ADA range firing with crew served guided missiles and rockets—

1. Receives missile and rocket firing advisory information from the senior RSO and advise the OIC accordingly.

2. Ensures the entire range is clear of unauthorized personnel and equipment prior to firing and maintains clearance throughout the entire firing sequence.

i. The senior range safety officer (SRSO).

(1) A SRSO is required for ADA guided missile and rocket firing. In addition to requirements outlined in paragraph 1–6*h*, personnel assigned as SRSOs must meet the qualifications, and are responsible for duties outlined below.

(2) Qualifications.

(a) Field grade officer, CW4 or CW5 (Army), or civilian in the grade of GS–12 or above.

(b) Weapon system qualified.

(3) Duties.

(a) Ensures the safe conduct of all ADA crew served guided missile and rocket firings.

(b) Enforces strict compliance with range safety standards and SOPs.

(c) Ensures RSO(s) comply with responsibilities listed in paragraph 1–6*h*.

(d) Complies with the restrictions, requirements and procedures listed in local SOPs (Marine Corps RSOs (Stinger)).

j. Trajectory safety officer (TSO).

(1) In addition to qualifications and responsibilities outlined in paragraph 1–6*h*, personnel assigned as TSOs will meet the qualifications and are responsible for duties as outlined below.

(2) Qualifications.

(a) Officer, warrant officer, or civilian in the grade of GS–09 or above.

(b) Weapon system qualified.

(c) Appointed by the SRSO based on experience with ADA crew served guided missile and large rocket firings.

(d) Technical knowledge and experience to adequately discharge TSO responsibilities.

(e) Satisfactory completion of range safety certification program.

(3) Duties.

(a) Assists the SRSO.

(b) Observes the trajectory of ADA crew served guided missiles and large rockets (or free ballistic rockets when provided with controllable destruct systems) to ensure missile or rocket containment within the boundaries of the SDZ.

1–7. Guidelines for range safety certification programs

a. U.S. Army Range safety certification programs are used to train and qualify personnel in the duties of OIC and RSO for firing exercises and maneuver operations. Certification programs are normally implemented at battalion or equivalent level. Marine Corps OIC and RSO certifications will be conducted at the installation level only.

b. Unit safety certification programs will be integrated into organizational training.

c. Once satisfied through training and testing that individuals are qualified to perform the duties of OIC and RSO of the firing unit, battalion commanders (U.S. Army) or installation commanders (Marine Corps) will certify, in writing, these individuals to range control.

d. Personnel designated as OIC and RSO must receive a range safety briefing from the installation range control organization on the use of the training complex as part of certification.

e. The effectiveness of safety programs for OICs and RSOs will be monitored by the installation range control officer and the installation safety officer.

f. Except for field artillery, a locally devised “Range Safety Card” program may be employed in lieu of unit generated rosters of certified personnel, if approved by the installation commander.

g. The installation commander may reduce the OIC and RSO grade requirements in table 1–1 by not more than one grade, with the following exceptions:

(1) OIC of battalion or larger combined arms live-fire exercises (CALFEX) will be a field grade officer.

(2) RSO for Marine Corps will be E6 or above for hand grenades.

(3) Marine Corps EOD units are exempt from OIC and RSO requirements. EOD units conducting EOD operations and training will supervise demolition and disposal operations following the guidance contained in NAVSEA OP5, NAVSEA SWO60–AA–MMA–010, and EODB 60 series publications. Marine Corps EOD units conducting disassembly and inerting will assign a qualified EOD technician as an RSO. Commanding officers may designate in nonemergency SOPs other instances that require EOD to use an RSO. The RSO may be an E–5 or above if, they are currently qualified as an EOD officer or technician MOS 2305/2336.

Chapter 2
Ranges

2–1. Restricting access to impact areas

a. Unauthorized persons are prohibited from entering the installation training complex. When empowered, the installation range control officer is the approval authority for entry onto ranges and maneuver areas, and into any impact area (temporary, dedicated, or high hazard.)

b. Unauthorized persons are prohibited from entering impact areas and other areas known or suspected to contain UXO by use of positive controls, to include fencing and posting of UXO hazard warning signs. For the Army, commanders will ensure appropriate fencing is used to restrict access to areas known or suspected to contain UXO. The commander will use risk management to determine the type and extent of fencing required. Primary factors to consider in making this risk decision are accessibility of the public to restricted locations and the level of UXO hazards in the area. Fencing will comply with security requirements and at a minimum consist of 3-strand barbed wire around UXO areas where public access is remote and hazards are low.

c. Where practical, positive means of excluding livestock (such as, fences, gates) must be established unless a written agreement negating this requirement with livestock owner(s) is in effect.

d. Personnel who must enter an impact area will be thoroughly briefed on the hazards of UXO by the installation range control office and/or EOD personnel.

e. Access into temporary and/or dedicated impact areas will be strictly controlled. Those portions of temporary and dedicated impact areas authorized for training or other authorized purposes will be surface cleared of dud ammunition before access is permitted. Cleared areas that become contaminated during live-fire exercises will be cleared when the exercise has been completed.

f. Personnel access to high hazard impact areas is limited to qualified EOD personnel, range control, range maintenance, and safety personnel designated by the installation range control officer. The installation commander may approve entry into impact areas by non-DOD personnel on a case-by-case basis.

g. For the Marine Corps, personnel will not enter HE, dud-contaminated impact areas to extinguish fires. Fires in HE dud impact areas will be contained by employing fire fighting personnel and techniques on range perimeters outside fragmentation distance of known dud ordnance. For the Army, entry into HE dud contaminated areas to extinguish fires is an extremely high-risk operation that requires a thorough risk assessment and approval at the appropriate level of command.

h. Digging entrenchments, foxholes, slit trenches, or any other activities that disturbs earth within an impact area is not permitted unless authorized by the installation range control officer. Maneuvers within a temporary impact area that include bivouac must prevent disturbing earth by driving poles, pegs, and so forth, into the ground, trenching around tents, or any activity that could disturb a dud located just beneath the ground surface. Open fires will not be permitted.

i. Unauthorized personnel are prohibited from handling UXO and munitions or removing them from the training complex. Procedures (for example, amnesty boxes) will be established for turn in of ammunition and explosives items by unauthorized personnel.

j. All normal vehicular and foot traffic approaches to ranges and impact areas will be guarded by range guards, properly instructed in their duties, or closed off by appropriate barriers, as determined by the installation range control officer. When barriers are used, appropriate signs will be posted.

k. Aeronautical charts limit aerial access to ranges within restricted areas. However, when conducting firing in small arms range safety areas, not contained within restricted airspace, air guards should be posted, or other effective means employed, to watch for and report incursion by non-participating aircraft (Army only.)

2–2. Posting warning signs and markers

a. Warning signs will be posted around the installation training complex to warn and prohibit entry by unauthorized persons, and to alert authorized personnel entering a hazard area.

b. Warning signs will be placed to ensure they are visible to individuals attempting to enter training complex live-fire areas at any point around its perimeter. They will be placed at 200-meter intervals or less, or in a way that will insure that a person cannot enter the range without seeing at least one sign within a legible distance.

c. For the Army, commanders will ensure that appropriate, standardized UXO hazard signs are posted at a minimum of 200-m intervals around all UXO locations. Effective with the publication of this pamphlet, all new UXO signs posted must conform to the Occupational Safety and Health Administration (OSHA) standard danger design specified by section 200b, part 1926, title 29, Code of Federal Regulations (29 CFR 1926.200b). New, standardized UXO signs, if constructed locally, are at least 33 centimeters (cm) by 43.5 cm in overall size and of weather resistant materials. The sign will state "UNEXPLODED ORDNANCE—DO NOT ENTER" in two lines of red sans serif capital letters in the lower white section of the sign. Make lettering at least 5 cm high and of weather resistant materials.

d. Signs at entry points to the training complex will prohibit trespassing and removal of items under penalties provided by law. Signs will also emphasize the dangers associated with unlawful entry and handling of dud ammunition. Where appropriate, signs will be in both English and the applicable foreign language.

e. Internal and external limit of fire markers will be placed to denote right and left limits of fire. See Training Circular (TC) 25–8 for limit of fire design requirements. When required, limit of fire markers will be illuminated to ensure proper target area identification at times of limited visibility. Limit of fire markers will be thermalized when thermal weapons sights are used. Appropriate hearing protection, eye protection, and laser warning signs will be posted at each range and firing line.

2–3. Controlling other range usage

a. When the installation training complex is authorized for use by nonmilitary organizations such as schools; county, municipal, state, or federal agencies; organized clubs (including rod and gun clubs); or civic associations, the following requirements apply.

(1) The organization or agency will comply with requirements and procedures established by AR 385–63/MCO 3570.1B, this pamphlet, and local range regulations and SOPs.

(2) Requests for use will be coordinated with the installation range control office, safety office, and the Judge Advocate General (TJAG), and submitted to the installation commander for approval.

(3) Requests will identify if non-DOD associated minors will be involved in firearms activities. If so, the activity must be an approved course of marksmanship training, unless otherwise approved by the installation commander.

(4) A written agreement must be completed between the installation and the nonmilitary organization, detailing all rights and responsibilities of each party, liabilities, procedures, and regulatory and procedural requirements. This agreement will be incorporated into the report of availability as required by AR 405–80.

(5) The nonmilitary organization designates an OIC and RSO. Personnel designated as OICs and RSOs will complete a pistol and rifle course approved by the National Rifle Association, or equivalent (for example, the U.S. Pistol Shooters Association). The installation commander, based on input from the range control officer, safety officer, TJAG, and other staff agencies, as appropriate, determine the equivalency.

(6) The installation range control officer will ensure designated OIC and RSO are briefed on their duties and responsibilities.

b. Military family members engaging in authorized marksmanship training or participating in activities involving weapons firing, such as organizational or family days, will comply with this regulation, installation range regulations, and SOPs. Requests for these activities will specify if minors will be involved.

c. Civilian personnel, such as military family members and local populace, must receive authorization from the installation range control officer to enter the training complex to participate in or observe capabilities exercises, fire power demonstrations, training courses, competitions, or other types of firing. Such personnel will remain in designated safe areas as determined by the installation range control officer.

d. Inspection team members, or other official observers required to be on the firing line, firing position, or firing area will position themselves in safe areas as determined by the installation range control officer. These personnel must wear appropriate safety equipment, as specified by the local range regulations and the installation range control officer.

e. Civilians, to include family members and DOD civilians, must have approval from the installation range control officer to fire weapons within the installation training complex.

2–4. Coordinating use of special use airspace

a. Airspace restrictions may be waived only by the Federal Aviation Administration (FAA). Coordination for FAA waivers will be made by the installation Air Traffic and Airspace Officer (AT&A), through the MACOM AT&A to the appropriate Department of the Army Regional Representative (DARR) or the Navy Representative (NAVREP) for the Marine Corps. Using units may obtain assistance in determining appropriate special use airspace (SUA) requirements for all planned activities from the installation and MACOM AT&A and appropriate DARR.

b. Any activity considered hazardous to nonparticipating aircraft or requiring SUA to segregate it from other users of the National Airspace System, or in airspace of host countries, will not be conducted until such SUA has been designated and activated for that purpose.

c. Types of activities that may require SUA include, but are not limited to: artillery fire, mortars, missiles and rockets, air-to-ground weapon systems, aerial target practice, laser operations, demolition and explosive devices, electronic warfare devices, remotely piloted and unmanned aerial vehicles, small arms ranges and any other activity considered to be hazardous or noncompatible with other users of the airspace. SUA is required to be designated and activated prior to conducting any activity over 45 meters (m) above ground level (AGL) (to include ricochet ordinates) that would be hazardous to aircraft except for activities authorized and conducted in a SARSA.

d. Special use airspace will be established and managed in accordance with AR 95–2 (Army). The installation AT&A officer is the focal point for SUA actions. For additional information and guidance contact the appropriate MACOM AT&A officer or DARR. Special use airspace will be established and managed in accordance with appropriate FAA regulations, local SOPs, and range control procedures (Marine Corps). The installations range control officer, in cooperation with the air traffic control officer and the regional airspace coordinator, is the focal point for SUA actions.

e. Types of SUA that may be requested include, but are not limited to—

(1) *Restricted areas.* When activated, these exclude all nonparticipants who do not have authorization to enter and usually will not be designated below 1,200 feet AGL unless the proponent owns or otherwise controls the surface of the earth beneath the restricted area. Restricted areas will be designated when determined necessary to confine or segregate activities considered to be hazardous to nonparticipating aircraft.

(2) *Controlled firing area (CFA).* A CFA is established to contain activities that, if not conducted in a controlled environment, would be hazardous to nonparticipating aircraft. It is the user's responsibility to provide for the safety of persons and property on the surface and for the safety of aircraft transiting controlled firing areas. No range activities will be conducted that will endanger aircraft in adjacent airspace.

(3) *SARSA (Army).* SARSAs are Army-established and Army-managed areas to contain small arms range activities that, if not conducted in a controlled environment, would be hazardous to nonparticipating aircraft. It is the user's responsibility to provide for the safety of persons and property on the surface and in the air. No range activities will be conducted that will endanger aircraft in adjacent airspace.

(4) *Warning areas.* Warning areas will vary depending on the particular country, international waters, and international airspace where the area is established. Contact the appropriate DARR or NAVREP for information and assistance.

f. The following procedures will be instituted regarding small arms ranges located outside restricted airspace or CFA.

(1) SARSAs will be established at each small arms range not located within the confines of restricted areas or CFAs. The data at table B–1 will be used as the basic vertical component for each weapon system used on the range and 152 meters will be added to that value and rounded up to the next 152-meter increment of altitude as a safety buffer when determining SARSA altitude boundaries. Table B–1 data represent ricochet vertical hazard only. It does not express maximum altitude of a direct fire trajectory. Installation commanders will take appropriate action to ensure that airspace above and adjacent to small arms ranges is adequately monitored to preclude endangering aircraft operations. The installation AT&A officer will coordinate with the appropriate MACOM AT&A officer and DARR for development for letters of agreement with local air traffic control (ATC) to assist in the early detection and notification of approaching aircraft (Army).

(2) Installation commanders are responsible for establishing and managing SARSAs. The commander will provide for the safety of persons and property on the surface and in collateral airspace. The installation AT&A officer will coordinate with the MACOM AT&A and DARR, or Headquarters U.S. Army Aeronautical Services Agency (USAASA) as appropriate prior to establishment of a SARSA. Coordination will be made with headquarters USAASA for areas not covered by the DARRs (Army).

(3) Installation commanders may establish or abolish SARSAs as appropriate within their areas of responsibility. Coordination is required with the MACOM AT&A officer and DARR or Headquarters USAASA, as appropriate, prior to establishment of a SARSA. Requesting agencies will forward proposals for establishment of SARSAs through the MACOM AT&A to the DARR. The requests will include as a minimum the following information (Army):

(a) Activity for which approval is being requested.

(b) Specific location and boundaries of the proposed SARSA.

(c) Altitudes included in the SARSA.

(d) Name, address, and phone number of the originator of the request.

(e) Proposed times of use.

(f) Desired effective date.

(g) Safety precautions to be followed including visibility requirements, ceiling (cloud height) requirements, safety observers, communication links, and any other factors that enhance range safety.

(h) Instructions, if applicable, for the user to notify the owner or manager of any airport that might be affected by the SARSA.

(4) Upon receipt of a proposal requesting a SARSA, the DARR (Army)—

(a) Reviews the proposal to determine if the proposed SARSA presents conflict with the requirements of other airspace users.

(b) If practicable, encourages the proponent to explore the feasibility of conducting the activity in an existing restricted area.

(c) After review, informs the proponent of any recommendations by formal correspondence of acceptability of the proposal.

(5) Precautionary measures necessary to protect aircraft in flight and, where appropriate, persons and property on the surface are dependent on the type of activity, terrain, and other factors involved. The reviewing DARR office will coordinate safety concerns with appropriate staff offices for resolution prior to establishment of SARSA. The following precautionary measures are mandatory requirements for all small arms ranges, as applicable (Army):

(a) The ceiling (cloud height) will be at least 305 m above the highest altitude of fire (maximum ordinate or ricochet height) or other activity that could be hazardous to aircraft in the area.

(b) Visibility will be sufficient to detect nonparticipating aircraft and cease fire before penetration of SARSA.

(c) If the reviewing DARR office determines that adequate radar surveillance is available, the ceiling and visibility requirements may be disregarded. This provision is contingent on the availability and serviceability of the radar service and the necessary communication links. Absence of radar advisory capability eliminates this provision.

(6) The range OIC is responsible for the surveillance of the airspace in the SARSA. Spotters and/or radar should be able to monitor airspace inclusive of a border extending up to 5 miles from the boundaries of the SDZ of the SARSA. Observers will maintain positive, immediate communication with the range OIC or range control at all times. Observers will be thoroughly briefed on their duties and responsibilities. Range control must have in place a plan adequate to support the range OIC in this effort (Army).

(7) All firing activities within the SARSA must cease upon notification of impending or actual incursion of the SARSA by nonparticipating aircraft. The user must cease fire upon notification of actual or pending incursion of the SARSA by nonparticipating aircraft.

(8) For assistance on SUA matters, (Army) contact—

(a) Installation air traffic and airspace (AT&A) officer.

(b) MACOM AT&A officer.

(c) The DARR responsible for your geographic area. (See AR 95–2, for DARR addresses and telephone numbers.)

(d) Headquarters USAASA.

2–5. Coordinating use of navigable waterways

a. Water traffic requirements that apply to firing over navigable waters, to include intracoastal waterways, can only be waived by U.S. Army Corps of Engineers (USACE). Installation commanders will notify the USACE division or district commanders and the U.S. Coast Guard District Office of—

(1) Waterway involved.

(2) Operations to be conducted.

(3) Sector of waterway needed for closure.

b. Federal laws that protect water traffic on navigable waterways authorize the Secretary of the Army to prescribe regulations for use and navigation of waterways endangered or likely to be endangered by firings and target practice. USACE will have notice of the restricted SDZ published in part 334, title 33, Code of Federal Regulation (33 CFR 334.)

c. Installation commanders will not authorize firing until notice of the restricted danger zone is published in 33 CFR 334 and navigation maps have been revised. Installation commanders will enforce closed waterways by radar and or surface vessel surveillance. Firing will not commence until the U.S. Coast Guard has marked the restricted danger zone with buoys.

d. Munitions, including guided missiles or rockets containing phosphorous, will not be fired or dropped into any inland waterway, lake, bay, wetlands, or other body of water.

e. Firing over navigable waters in overseas areas, to include intercoastal waterways, will be performed within parameters of Status of Forces Agreements and appropriate host nation requirements.

2–6. Safety requirements for indoor firing ranges

a. This paragraph provides guidance for the safe operation and maintenance of Army indoor firing ranges. In particular, it addresses airborne lead concentrations, required housekeeping, and required inspection programs.

b. Lead intoxication.

(1) Indoor firing ranges must comply with the OSHA standards, including medical surveillance requirements. Personnel exposures, which are intermittent, will be controlled per the criteria provided in table 2–1.

Table 2–1
Breathing zone exposure limits for intermittent atmospheric lead exposures

Concentrations (in mg/m^3)[1]	Maximum hours of allowable exposure per day		
	SOLDIERS exposed fewer than 30 days per year	Soldiers on marksmanship teams or soldiers exposed more than 30 days per year and all nonmilitary personnel	Range users under 17 years of age[2]
0.000 to 0.029	8	8	4
0.030 to 0.039	8	6	3
0.040 to 0.049	8	4.5	2
	Limited use ranges		
0.050 to 0.059	6	4	2

Table 2–1
Breathing zone exposure limits for intermittent atmospheric lead exposures—Continued

Concentrations (in mg/m^3)[1]	Maximum hours of allowable exposure per day		
	SOLDIERS exposed fewer than 30 days per year	Soldiers on marksmanship teams or soldiers exposed more than 30 days per year and all nonmilitary personnel	Range users under 17 years of age[2]
0.060 to 0.079	5	3	1
0.080 to 0.099	4	2.25	1
0.100 to 0.149	2.5	1.5	0
0.150 to 0.199	2	1	0
0.200 to 0.299	1.25	0.75	0
0.300 to 0.399	1	0.5	0
0.400 to 0.499	0.75	0.5	0
0.500 to 0.749	0.5	0.25	0
0.750 to 0.999	0.25	0.25	0
1.000 or above	0	0	0

Notes:
[1] These values are the actual concentrations measured over the sampling period and are not 8-hour, time-weighted averages.
[2] Recommend that an occupational health physician make the determination on length of firing time for individuals 17 years of age and younger.

(2) The criteria in table 2–1 were developed to control intermittent lead exposure and establish maximum hours of exposure based on the airborne lead concentration and the number of days firing per year. These criteria are to be used as interim control measures only. Maximum effort will be made to reduce the airborne lead levels to 0.03 milligrams per cubic meter (mg/m^3) or less.

(3) Lead exposures for personnel are determined by a sampling strategy that employs general-area and breathing-zone samples. Paragraph 2–6*c*(2) contains guidance for air sampling. Once an airborne lead concentration is determined, table 2–1 is used to set maximum allowable hours of exposure for each category of range user. Other potential lead exposures, including off-duty firing, may contribute to an individual's overall exposure and should be considered in establishing maximum allowable exposure time.

(4) Medical surveillance is not required for intermittent users if the maximum allowable exposure hours from table 2–1 are enforced.

c. Air sampling.

(1) Collect all lead samples on cellulose ester filters meeting the following specifications: pore size of 0.8 micron, 37 millimeters (mm) in diameter, three-piece preloaded cassette, and closed face. Sampling rate should be 1 to 4 liters per minute for a minimum volume of 500 liters.

(2) Sample on the firing line, 3 m behind the firing line, and in adjacent area (such as, range office, supply room or hallways). In small ranges (fewer than six firing positions), samples should be taken at each firing position on and off line. In larger ranges (six or more firing positions), breathing-zone and general-area samples should be taken in every other firing position and off line. Permanently assigned range personnel should have breathing-zone samples taken. Exposures to other personnel may be evaluated using data obtained from general-area and breathing-zone samples, if applicable. Take at least one air sample for lead in an area adjacent to the range defined above during each monitoring period. The sample should indicate whether or not lead contamination is confined to the range.

(3) The following actions are critical to proper range evaluation:

(a) Sample during periods of maximum use.

(b) If firing is over an extended period of time, allow time for possible buildup or airborne concentrations before sampling.

(c) Sample during the use of higher-caliber ammunition if more than one type of ammunition is used.

(4) Calibrate all pumps before and after use by a method traceable to a primary standard (for example, bubble burette).

d. Ventilation.

(1) Contaminations occur as byproducts of firing (that is, lead, carbon monoxide, and aldehydes) and must be removed from the range through an adequate ventilation system. The maximum concentration of lead acceptable for an 8-hour daily exposure (time-weighted average) is 0.05 mg per m^3. A ventilation system designed to provide this protection is sufficient to remove the other byproducts of firing.

(2) Optimum ventilation systems should intake make-up air behind the firing line and expel exhausted air at the target line or bullet trap.

(3) Down-range air velocity can be measured or approximated by using a 30-second smoke candle and stop watch. Ignite the smoke candle behind the firing line and time the smoke from the moment the first plume crosses the firing line until it reaches the bullet trap. Calculate the air velocity in meters per second (m/s) by dividing the range distance or length (from firing line to bullet trap) (D) by time (T), or D/T = m/s. A minimum of 0.18 m/s is required. This is equal to 0.017 cubic meters per second per square meter of cross-sectional area. During the smoke evaluation, observe the range for any "dead spots" (swirling of smoke up-range) or other turbulent airflow motions that may allow for increased exposure at or behind the firing line.

e. Army requirements for inspection of indoor firing ranges. Indoor firing ranges require periodic inspections to ensure compliance with current health and safety standards. The types of periodic inspections are initial, detailed and annual.

(1) Initial inspections are one-time inspections made by qualified and competent safety or engineer personnel. The purpose of the initial inspection is to classify the authorized level of use of the indoor range. Based on the findings of the initial inspection, indoor ranges will be classified as safe, limited, or unsafe. DA Form 5687 (Initial Inspection Checklist for Indoor Ranges) will be used to record the initial inspection. A copy of the initial inspection will be maintained at the range and available for review.

(a) An indoor range classified as safe permits authorized firing for military and civilian use.

(b) An indoor range classified as limited permits only limited use under controlled conditions. The personnel exposure limits for intermittent atmospheric lead exposure will be used for limited operation of the indoor range.

(c) An indoor range classified as unsafe is not authorized for use under any conditions.

(2) Detailed inspections will be made by the support installation team, composed of safety, facility engineer, and medical department activity representatives. Detailed inspections are in addition to the initial inspection. DA Form 5688 (Detailed Inspection Checklist for Indoor Ranges) will be used as a minimum for conducting the inspection. Findings from the detailed inspection will determine complete range retrofit requirements. For new facilities, a detailed inspection will be made within 120 days of the initial inspection.

(3) Annual inspections will be made by safety or engineer personnel to ensure safety standards and procedures are maintained in the operation of the range. The annual inspection will be made within 45 days of the anniversary date of the last annual inspection.

f. Disposition of Army inspection and evaluation results.

(1) Inspection and evaluation results will be provided to the next higher headquarters for action as appropriate. Supporting installation safety managers will maintain an information copy.

(2) The supporting facility coordinator will maintain a record of each inspection. Subsequent inspections will be made as a follow-up check against previous inspection results to assure required corrective action(s) noted has/have been accomplished and that there are not adverse changes to the building envelope, environmental conditions, and/or safe operating procedures.

g. U.S. Army MACOMs may address inquiries pertaining to indoor range safety to Commander, TRADOC, ATTN: ATCS–S, Fort Monroe, VA 23652–5000, DSN 680–2193. Marine Corps inquiries will be directed to CG, MCCDC (Code C46R), 3300 Russell Road, Quantico, VA 22134–5001.

h. Inquiries pertaining to ventilation, air sampling and other industrial hygiene issues should be directed to Commander, U.S. Army Center for Health Promotion and Preventive Medicine, ATTN: MCHB–TS–OFS, 5158 Blackhawk Road, Aberdeen Proving Ground, MD 21010–5403, DSN 584–3118. Marine Corps inquiries will be sent to Commandant of the Marine Corps (SD), 2 Navy Annex, Washington, DC 20380–1775, DSN: 224–1077/1202.

Chapter 3
Ammunition

3–1. Smoking

Smoking is prohibited at firing pads, ready storage sites, and assembly sites. "No smoking" signs will be prominently displayed. Smoking is also prohibited on any vehicle used to transport propellants or explosives. The possession of matches or any other flame-producing device while working with or transporting propellants or explosives is not allowed except as required for a particular operation.

3–2. Positioning and issuing ammunition and explosives

a. Ammunition and explosives (to include pyrotechnics) will be positioned to minimize the potential for ignition from external sources, explosion, rapid burning, or sympathetic detonation and will be located and stored in accordance with this pamphlet and requirements of AR/DA PAM 385–64 (Army) or NAVSEA OP5 (Marine Corps) as appropriate.

b. Training situations require ammunition and explosives at various locations that are temporary or transient by

nature. It is not intended that these locations require approval by the Department of Defense Explosives Safety Board (DDESB) if ammunition and explosives are in total support of a training mission. Installation and service controls will be established to ensure quantity-distance standards are applied to the extent possible.

c. Distribution of ammunition to personnel will occur only in areas designated for that purpose, for example, ammunition breakdown buildings, ready lines, firing lines, attack positions, assembly areas, or defilade positions. Blank and live-fire ammunition will not be stored in or issued from the same building at the same time.

d. Fuel and ammunition resupply operations and points will be located a minimum of 300 meters apart. General officer installation commanders may authorize deviation from this standard based on quantity-distance (Q–D) criteria. Distances will not be reduced below the public traffic route (PTR) distance for troops in training. Forward arming and refueling point operations and separation distances for fuel, ready ammunition storage areas and basic load storage areas will be in accordance with FM 1–111 and FM 10–67–1. Distance will not be reduced below the PTR distance for training.

e. The quantity of ammunition unpacked at the breakdown building or firing line will be kept to the minimum number of rounds needed for efficient firing for the exercise. Packaging material, propelling increments, and fuzes will be retained until firing is complete. Units will not burn wooden containers or indiscriminately fire or dispose of ammunition to preclude its return to a storage facility. (Exception: Smokey Sam rockets (a pyrotechnic) are issued by the case with a quantity of 12 rockets and 12 igniter rods. Planning use of these pyrotechnics requires careful consideration of the effects of moisture on unpacked items. All unpacked rockets must be expended and only full, unbroken cases returned to the ammunition supply point.) Broken and or unserviceable increments (powder bags) will be handled in accordance with installation range and environmental requirements.

f. Guided missiles, rockets, and components, such as fuels, propellants, oxidizers, and explosives in ready storage or at the firing location, will be positioned to minimize the possibility of ignition or detonation by motor exhaust or by an accident involving the firing of a missile or rocket. Items will be stored in dry locations, protected from direct rays of the sun, and adequately ventilated. Marine Corps Smokey Sams, Smokey Guns, and pyrotechnics will be stored as outlined in appropriate Marine Corps TMs, or Commander, Naval Air Systems Command (NAVAIR), technical publications.

g. During prefire preparation, guided missiles, rockets, and components will be handled and assembled in a manner consistent with this pamphlet, local range requirements, and appropriate FMs and TMs. Any alteration to guided missiles or rockets and their associated equipment is prohibited, except as authorized by official publications or by the CG, Army Materiel Command (AMC).

h. All ammunition unpacked for firing, but not fired, will be repackaged into its original packing configuration prior to return to the ammunition supply point.

i. Ammunition that is easily degraded by short-term exposure to moisture, such as propelling charges, pyrotechnic signals, and simulators, will be unpacked only for the minimum amount of time consistent with mission requirements.

j. Requests for current status of ammunition not listed in NAVSEA TWO24–AA–ORD–010 will be sent to NAVAMMOLOGCN, Mechanicsburg, PA, DSN 430–2107/Comm (717) 605–2107 (Marine Corps).

k. Defective ammunition will be reported in accordance with MCO 8025.1D (Marine Corps).

3–3. Qualification and restriction of ammunition and explosives

a. The term "nonstandard item of explosives or ammunition" relates to an item that—

(1) Has not been accepted and type classified for use by the U.S. military.

(2) Is a standard item of demolition or munition that has been altered to change its characteristics or to do an essentially different function from that for which it was intended and manufactured; and then used as initially intended. Examples of this are adding excess increments to mortar or artillery ammunition, jamming VT fuzes, increasing the propellant in small arms cartridges, or assembly of explosives components to inert rounds.

b. The term "field expedient explosive" denotes a standard item of explosive that is combined with other standard explosive items or items that are normally nonexplosive by using techniques and procedures outlined in doctrinal publications (FMs and TMs.)

c. Use of nonstandard ammunition and explosive items is prohibited unless specifically approved by one of the following: CG, AMC; Commander, Marine Corps Systems Command (COMMARCORSYSCOM); Chief of Ordnance, Aberdeen Proving Ground, MD; CG, U.S. Army Special Operations Command (USASOC); or CG, U.S. Army John F. Kennedy Special Warfare Center and School, Fort Bragg, NC, as appropriate. Commanders of Special Forces groups may approve use of nonstandard items of explosives when necessary for Special Forces training and operations. The use of approved nonstandard ammunition and explosives on a specific installation rests with the installation commander of the affected installation if authorized by the MACOM commander.

d. Commander, AMC, ATTN: AMCSF, Alexandria, VA 22333–0001, will be informed by message of any nonstandard item approved by other than Commander, AMC.

e. Field expedient explosive devices as prescribed by applicable field manuals and technical manuals are authorized for use contingent on the approval of the installation range control officer. Approval should be granted only after risk management is applied and an item specific SOP developed to implement controls.

f. Small arms ammunition with loss of lot identity (unknown lots) that has been inspected and classified according to AMC criteria is authorized for hand-held weapons systems and ground and vehicle mounted machineguns. These munitions are prohibited from use in overhead fire and qualification exercises. Marine Corps units will comply with guidance contained in paragraph 4.g of MCO P8020.10A when the loss of small arms lot identity occurs.

g. Altering loaded ammunition, such as increasing the amount of propellant, is prohibited. Exceptions may be made only by the CG, AMC, or his/her authorized representative for the respective command. Alterations will be under the supervision of a qualified officer, warrant officer, or civilian. Assembly of explosive components to inert rounds is also prohibited unless the CG, AMC, or an authorized representative of the respective command has issued approval. For Marine Corps units, modification of ammunition is prohibited except for those authorized procedures contained in weapon system technical manuals (such as artillery fuze charges). Exceptions may be granted by the CG, MCCDC (C46R), in conjunction with COMMARCORSYSCOM (AM). Rendering service munitions inert for training purposes by EOD personnel is authorized only under the conditions outlined in the current edition of MCO 8027.1.

h. Ammunition for demonstrations, training, or similar activities will be used for the purpose for which it was manufactured. Any attempt to use ammunition in an unorthodox manner, or to purposely attempt to make it malfunction, such as by jamming VT fuzes with signal equipment, is prohibited. Exceptions may be granted for special tests and demonstrations when plans are approved in writing by CG, AMC (Army) or CG, MCCDC (C46R) (Marine Corps.)

i. Unit ammunition personnel will be familiar with inherent hazards of specific types of ammunition and proper identification markings and color codes. Firing restrictions for specific ammunition involved will be recorded in the unit ammunition property book (not applicable to Marine Corps units.)

j. Certified ammunition must be used for exercises that require overhead fire of unprotected troops (that is, certified propellant, projectile, and fuze).

(1) Ammunition lots determined to be satisfactory for overhead fire of unprotected personnel are listed in TB 9–1300–385/NAVSEA TWO24–AA–ORD–010.

(2) Marine Corps activities will use the Notice of Ammunition Reclassification messages, which supplement the NAVSEA TWO24–AA–ORD–010 to determine ammunition serviceability.

(3) Only lots of artillery ammunition that have been cleared and are not suspended by TB 9–1300–385 or NAVSEA TWO 24–AA–ORD–010 will be used in training exercises requiring overhead fire and close support of ground personnel by overhead or flanking fire and overhead fire attack courses. Each lot of ammunition used in these exercises will be fired for adjustment before firing over the heads of unprotected troops.

(4) For U.S. Army and Marine Corps units on U.S. Army facilities, small arms ammunition (SAA) for overhead fire is identified by national stock number (NSN) and not by lot number in the DOD consolidated ammunition catalog. Using units seeking to use SAA in overhead fire applications must pay particular attention to the NSN being requisitioned. Only SAA identified for overhead fire and not suspended by TB 9–1300–385 or NAVSEA TWO24–AA–ORD–010 may be utilized for that purpose.

(5) Requests for current status of ammunition lots not listed in TB 9–1300–385 will be sent to Commander, U.S. Army Operations Support Command (OSC), ATTN: SOSMA–SNS, Rock Island, IL 61299–6000.

k. Ammunition determined to be defective will not be fired. Defective ammunition will be reported to the local ammunition officer or quality assurance specialist, ammunition surveillance (QASAS). Examples of defects include, but are not limited to:

(1) Fuzes or fuzed rounds that are inadequately tightened, insecurely staked, or missing safety devices.

(2) Safe and arming mechanisms, if so equipped, in an armed position.

(3) Ammunition showing deterioration or corrosion.

(4) Ammunition showing evidence of defects in material or assembly.

(5) Ammunition that has been dropped and there is visible damage.

l. Ammunition and unopened ammunition packaging which shows evidence of tampering will not be issued until cleared by competent authority (for example, QASAS).

3–4. Suspension of ammunition and explosives involved in malfunctions

a. When any round or item of ammunition, explosives, or their components malfunctions, the firing unit will notify the range control office. The range control office will immediately report the incident(s) to the supporting QASAS, or the installation ammunition officer. Marine Corps units will report defective ammunition in accordance with MCO 8025.1. Appropriate action will be taken as required by AR 75–1 or MCO 8025.1D. Firing suspensions and restrictions are published in TB 9–1300–385, NAVSEA TWO 24–AA–ORD–010, and appropriate technical manuals.

b. For guided missiles, rockets, or components thereof that have malfunctioned and when it is evident that personnel safety or equipment is at risk, the affected lot will be locally suspended immediately. A missile and rocket malfunction report (DA Form 4379–1) will be submitted in accordance with AR 75–1, and the lot will remain suspended until released by the U.S. Army Aviation and Missile Command (AMCOM). Marine Corps will use procedures set forth in MCO 8025.1.

(1) The Ammunition Officer, with the locally assigned QASAS, if available, and the AMC weapons representative, when appropriate, will—

(a) Gather data as necessary for all reported malfunctions.

(b) Locally suspend affected ammunition and immediately notify all units in possession of suspended stock in accordance with AR 75–1.

(2) Upon receipt and investigation of the reported ammunition malfunction, the CG, OSC, for conventional ammunition, or the CG, AMCOM (Army), or COMMARCORSYSCOM(AM) (Marine Corps) will determine if the affected ammunition should be suspended.

c. Any ammunition suspended and listed in TB 9–1300–385 or NAVSEA TWO24–AA–ORD–010 and supplements will not be fired in training.

d. Firing of any ammunition listed in TB 9–1300–385 or NAVSEA TWO24–AA–ORD–010 and supplements as being "restricted" will be conducted only in accordance with the restriction requirements.

3–5. UXO and misfire procedures and reporting

a. The range OIC will report all UXO (dud) ammunition to the installation range control officer. In the case of grenades or other munitions that may be immediately hazardous to personnel (that is, bursting radius), firing will be halted until qualified EOD personnel clear the dud. In other cases, firing need not be halted. Duds not cleared by EOD personnel before the unit departs the training complex will be reported in writing to the installation range control officer for data compilation and determination of clearance scope.

b. Misfire procedures in training manuals for the appropriate weapon system will be followed. In the event misfires present an immediate hazard to personnel or a cease-fire is necessary, they will be reported to range control.

c. When dud and misfire rates equal or exceed the rates given in appendix A of AR 75–1 or enclosure 2 of MCO 8025.1, the affected lot(s) will be reported as a malfunction.

3–6. Disposition of ammunition and explosives involved in malfunctions and accidents

a. Materiel involved in malfunctions or accidents and any evidence, such as components or fragments of the weapon system, ammunition, missile, or rocket will be carefully preserved in the position and at the location it occupied at the time of the incident. If the material has been involved in a class A or B accident, as defined in AR 385–40 or MCO P5102.1, it will remain in position until disposition is directed by the investigating authority unless immediate hazard to life or property are present. AMC will be notified of conventional ammunition incidents, and AMCOM (AMSMI–MMC–MM (AMMO)) for guided missile and rocket incidents. In accordance with AR 75–1, missile and rocket materiel and residue will be certified safe-to-ship and safe-to-store in accordance with system publications (if applicable.)

b. Damaged or malfunctioned guided missiles and rockets will be reported per AR 75–1 and handled per the applicable TM.

3–7. Destruction of UXO

a. Destruction of UXO (dud) will be in accordance with Environmental Protection Agency Military Munition Rule and approved Army procedures or NAVSEA OP5, Volume 1. Destruction of dud ammunition will be accomplished only under the supervision of EOD personnel.

b. Commanders of Special Forces units may approve the destruction of UXO (dud) ammunition when all the following conditions are met:

(1) When serving in a location outside continental United States (OCONUS) and EOD personnel are not reasonably available.

(2) When the duds are of 107 mm or smaller.

(3) When the dud ammunition was fired by, or under the supervision of, U.S. Special Forces personnel.

(4) When leaving the dud ammunition in place would clearly present a greater hazard to U.S. forces, host country forces, or the civilian populace than destroying it.

c. When all conditions in paragraph 3–7*b* have been met, the dud ammunition may be destroyed by Special Forces Engineer personnel, PMOS 18C, using the following techniques.

(1) Duds will be detonated in place only. They will not be moved or disturbed in any way.

(2) Duds will be destroyed using U.S. military explosives only. Preference will be given to using composition-type explosives. Military TNT (trinitrotoluene) is acceptable. The use of commercial explosives of any type is not authorized.

(3) Explosives will be detonated using standard initiation systems. Improvised initiation systems are not authorized.

3–8. Policing the training complex

a. Removal of spent brass, unfired rounds, or components of fired rounds from UXO contaminated impact areas without the consent of the installation RCO is not authorized.

b. Dumping ammunition or explosives into impact areas or other unauthorized disposal or disposition areas is prohibited.

c. Unauthorized removal of ammunition, pyrotechnics, explosives, or residue from munitions or from the range or installation training complex is prohibited.

d. The collection of spent brass is not required when ammunition is expended from mounted or dismounted weapons over extended terrain.

3–9. Army requirements for areas known to contain ICMs and submunitions

This section prescribes Army requirements, procedures, and waivers for the control of hazards associated with the maintenance, characterization, and clearance of ranges and other areas known to contain ICMs and submunitions.

a. Applicability.

(1) Activities involving ICM or submunitions undertaken by Active Army, Army National Guard, and U.S. Army Reserve personnel, Army civilian employees, and Army contractors.

(2) Ranges and other areas owned or controlled by the U.S. Army, in the continental United States and OCONUS (including active, inactive, closed, transferred, or transferring ranges) and including activities conducted by other services on Army-owned or controlled property.

b. Functions.

(1) The Director of Army Safety (DASAF), Office of the Chief of Staff, U.S. Army, administers and directs the Army safety program as specified in AR 385–10. The DASAF—

(a) Establishes risk assessment criteria for ICM and submunition clearance activities.

(b) Serves as the HQDA waiver approval authority, with the Director of Training, ODCS, G–3, for clearance of ICMs and submunitions from training lands. The DASAF and the Director of Training will coordinate review of these waivers with Deputy Assistant Secretary of the Army (Environment, Safety, and Occupational Health) (ESOH) and ODCS, G–4 (DALO–AMA) as part of the approval process.

(c) Serves as the HQDA waiver approval authority, for clearance of ICMs and submunitions from non-training lands. The DASAF will coordinate review of these waivers with DASA (ESOH), DAMO–TR, and DALO–AMA as part of the approval process.

(2) TJAG is responsible for providing advice on statutory and regulatory requirements affecting ordnance and explosives clearance activities.

(3) The U.S. Army Technical Center for Explosives Safety (USATCES)—

(a) Provides comments on requests for waivers to the Army restriction on maintenance, characterization, or clearance of ranges or other areas known to contain ICMs and submunitions.

(b) Provides guidance on historical records searches to determine past usage of ICMs or submunitions.

(c) Maintains an inventory of Army property and formerly used defense sites containing ICMs and submunitions.

(4) Commanders with responsibility over ranges or other areas known to contain ICMs or submunitions—

(a) Ensure that ODCS, G–3 (DAMO–TR), Office of the DASAF, ODCS, G–4 (DALO–AMA), and USATCES are informed of any ranges or other areas known to contain ICMs or submunitions.

(b) Ensure ranges or other areas known to contain ICMs or submunitions are clearly marked and entry to these areas is restricted and access is controlled.

(c) Prohibit clearance activities on ranges or other areas known to contain ICMs or submunitions, unless a waiver is submitted and approved in accordance with this paragraph.

(d) Follow the procedures contained in this pamphlet regarding the content of waivers to the restriction on maintenance, characterization, or clearance of ranges or other areas known to contain ICMs or submunitions.

c. Mandatory requirements for ranges and other areas known to contain ICM and submunitions.

(1) Army policy restricts the use of ICMs and submunitions. Army policy also restricts the maintenance, characterization, and clearance of ranges and other areas known to contain ICMs and submunitions.

(2) Ranges or other areas known to contain ICMs or submunitions will be clearly marked, at the physical location and on installation master plans, to identify the hazard. Entry to such areas will be restricted and access controlled.

(3) Before personnel access is granted to range impact areas, the installation range control officer will determine whether actual or suspected ICM/submunitions contamination exists. The range control officer, in coordination with installation safety and EOD representatives, will determine if it is safe to permit personnel access and establish prerequisite precautions. Personnel permitted to enter any area known or suspected to contain ICMs or submunitions will be fully apprised of the potential dangers and the safeguards to be exercised.

(4) If an ICM or submunition is found on a range that is not known to contain ICM or submunitions, the ICM will be blown in place. Emergency destruction by Army EOD units is authorized. Use of the range will be suspended until the installation range operations conduct the procedures in paragraph 3–9*c*(3).

(5) Range control or safety personnel will report areas known to contain ICMs or submunitions on Army ranges or other areas immediately through command channels to the ODCS, G–3 (DAMO–TR), ODASAF, ODCS, G–4 (DALO–AMA), and USATCES. At a minimum, the report will include location; type of ICM or submunition; the boundaries (by coordinates) of the area known to contain ICMs or submunitions; the suspected source (for example,

weapon system and event in which the ICM or submunitions were most likely used); the date of discovery; a point of contact; and, if available, digital pictures of the discovered item. Local supporting EOD units should be notified.

(6) There may be situations that present a compelling need to clear ICMs or submunitions from a range or other area known to contain ICMs or submunitions. In such situations, a waiver to the restriction on clearance of ranges or other areas known to contain ICMs or submunitions will be considered case by case. Waivers will be approved only when it can be shown that the reason for clearance (for example, to improve a range to provide needed training, or clearance is a prerequisite to a mandated transfer of real property) outweighs the increased explosives safety risk associated with clearance of ICMs or submunitions. Procedures for application, processing and approval of a waiver are described in paragraph 3–9*d*.

(7) Maintenance, characterization, and clearance on ranges or other areas involving munitions that are not considered ICMs or submunitions, but that have sensitive mechanisms for initiating the explosives firing mechanism (such as, M83 4-pound fragmentation "butterfly" bomblet or the M54 series 4-pound incendiary bomb), are not addressed by this policy. However, plans for maintenance, characterization, or clearance of such munitions will be evaluated at HQDA, ODASAF.

d. Waivers.

(1) Requests for waivers are submitted by the commander of the installation or U.S. Army Corps of Engineers district. Heads of tenant activities will forward requests through the installation commander. Waivers will be forwarded and approved through the waiver approval channels prescribed in AR 385–64.

(2) Requests for waivers will include the following information, in the following order.

(a) The purpose and scope of the proposed activities to be conducted under the waiver. Explain, in detail, the compelling reasons for the proposed activities (see paragraph 3–9*c*(6).

(b) The name and location of the areas in which the proposed activities will be conducted. Provide maps—

1. Showing the regional location of the site.

2. Showing the boundaries of the area(s) for which the waiver is requested.

3. Showing, for Army-controlled property to be released outside DOD, the boundaries of the parcels to be released and listing the anticipated reuse of each parcel and any land use restrictions to be placed on the property (plans for the release of such property must be submitted for review and approved by the DDESB).

4. Listing, for property not under DOD control (such as formerly used defense sites), the past and current use and, if known, the anticipated reuse of each area to undergo clearance and any existing land use restrictions applicable to the property.

5. Listing the planned clearance depths and providing site-specific data to support the depth of clearance determination.

(c) Alternatives to the proposed activities specified in 3–9*d*(2), and justification for selection of the proposed activities over these alternatives.

(d) A description of the use of the site that led to presence of ICMs or submunitions. This description can consist of extracts from inventory project reports, preliminary assessments, historical records searches, archive search reports, site inspections, safety surveys, engineering evaluations/cost analyses, or other appropriate sources.

(e) Characterization of the terrain—with regard to soil, topography, and vegetation factors that may impact ordnance and explosives detection and recovery—for areas for which the waiver is requested. Delineate terrain characterization on site maps.

(f) Information on known or suspected ICMs and submunitions in areas for which the waiver is requested. Provide technical details of the ICMs and submunitions such as unclassified extracts form EOD publications. Describe how each ICM or submunition functions. Include exterior views and cutaway views of each submunition and cutaway views of their fuzing mechanisms.

(g) Information on known or suspected unexploded ordnance (non-ICM/submunition) in areas for which the waiver is requested. This information should include estimates of the type, location, depth, and density of such unexploded ordnance and should be annotated on a site map.

(h) A description of technology and methods to be used to detect, recover, and destroy recovered unexploded ordnance, including ICMs and submunitions. When describing the technology and methods, address capabilities and limitations (to include those imposed by terrain and soil type) and provide a statement specifying the smallest item the equipment is capable of detecting at the detection depth.

(i) The number, composition, training, experience, and certifications of supervisors and members of the work teams that will be within the areas for which the waiver is requested.

(j) An in-depth explosives safety risk assessment detailing the hazards of, and safety controls (including personal protective equipment) for, the proposed activities. Specific attention will be paid to the types, quantities, and locations of ICMs and submunitions potentially encountered (based on site- and munition-specific activities, hazards, and controls). The risk assessment will be approved at the appropriate level within the requestor's chain of command.

(k) Quality-distance maps for each area for which the waiver is requested. (Scaled maps of 1 in equals not more

than 400 ft are preferred; a larger scale is acceptable if distances can be shown with accuracy. If unscaled maps are used, then the maps must label distances). Maps will indicate the following:

1. Public withdrawal distances, ICM/submunition team separation distances, and separation distances to be employed in destruction of ICMs and submunitions. Identify every inhabited building, occupied area, and public traffic route inside these safety distances and describe measures to be taken to minimize or eliminate risk for exposures within them.

2. The location of magazines for the storage of demolition explosives and recovered ordnance and explosives.

(l) Summarize EOD, United States Army Technical Escort Unit, and contractor support. When military EOD units are involved in the range clearance activities, their portion of the operational plan will be approved by the EOD unit's chain of command.

(m) A description of quality control and quality assurance procedures, standards, and pass/fail criteria.

(3) Upon completion, waiver requests are forwarded through the chain of command for approval/endorsement by the MACOM. MACOMS will forward the waiver requests thru USATCES to HQDA, ODASAF. USATCES will review and provide written comment prior to forwarding the waiver requests to HQDA, ODASAF, for consideration by the waiver approval authority. USATCES will, if requested, assist installations in the preparation of waiver.

(4) Following consideration of the waiver request, the waiver approval authority will provide a written response through the command channel.

(5) If, after initiating activities under a waiver, any of the following conditions occur, activities will be stopped and the commander will submit an amended request for waiver, using the procedures prescribed in paragraph 3–9*d*(2) and (3). Commanders should coordinate with USATCES to determine if, based on the scope of the change in conditions, an amendment is required.

(a) ICMs or submunitions of a type not specified in the current approval are encountered. The amended request for waiver will update information affected by the change. The amended request for waiver will update, or indicate no change to, the information required in paragraph 3–9*d*(2).

(b) Additional areas require maintenance, characterization, or clearance. The amended request for waiver will specify the reason for the change and update information affected by the change. The amended request for waiver will update, or indicate no change to, the information required in paragraph 3–9*d*(2). Work may continue in areas as approved in the initial waiver provided safety distances are not encroached.

(c) The scope of work or work techniques change. The amended request for waiver will specify the reason for the change and update information affected by the change. The amended request for waiver will update, or indicate no change to, the information required in paragraph 3–9*d*(2).

e. Hazard control requirements for maintenance, characterization, or clearance of ranges or other areas.

(1) Operations will be conducted in a manner that exposes the minimum number of people to the smallest quantity of explosives for the shortest period of time.

(2) All work activities will be coordinated with and have the approval of all levels of commands and all services involved.

(3) All work activities will be conducted in accordance with the controls outlined in approved ordnance and explosives safety and health planning documents (such as explosives safety risk assessment, hazard analyses, and site safety and health plans).

(4) Only qualified UXO personnel may enter and conduct maintenance, characterization, or clearance in areas known to contain ICMs or submunitions. Qualifications for UXO personnel include:

(a) Graduation from the U.S. Army Bomb Disposal School, Aberdeen Proving Ground, MD; the U.S. Naval EOD School, Indian Head, MD; the U.S. Naval EOD School, Eglin AFB, FL; the EOD Assistant Course, Redstone Arsenal, AL; the EOD Assistant Course, Eglin AFB, FL; or a DOD-certified UXO qualification course.

(b) More than 5 years combined active duty military EOD and contractor UXO experience.

(5) The qualified UXO personnel involved in maintenance, characterization, or clearance of ranges or other areas known to contain ICMs or submunitions will receive training in the hazards of the specific ICM or submunition specified in the waiver request and the procedures to control those hazards.

(6) Minimum team separation distance will be the larger of the following:

(a) The distance $D = KW^{1/3}$, using K = 50 and W = the net explosive weight of the munition with the greatest net explosive weight, whether conventional or ICM/submunition, or

(b) 200 ft.

(7) Whenever possible, ICMs or submunitions encountered will not be disturbed or touched, but will be blown in place. Prior to destruction, all personnel will be removed, at a minimum, beyond the specified separation distance. The separation distances for blow-in-place locations will be determined using distances described in paragraph 5–7*c*(2)(b) of Department of the Army (DA) Pam 385–64 or allowed by DDESB-approved quantity-distance reduction methods or engineering controls.

(8) Any explosive-related incident involving injury to personnel will be immediately reported in accordance with

AR 385–40. Upon the occurrence of such an incident, activities will be stopped until a review and validation of procedures has been completed and approved by the Commander with responsibility for the activities.

(9) The ODASAF and the ODCS, G–3 (DAMO–TR) will be notified, in writing, upon conclusion of work activities. This notification will include an after-action report detailing the type and number of ICMs and submunitions recovered; the location, depth, and aerial dispersion of the ICMs and submunitions; the disposition of the ICMs and submunitions; and any safety concerns associated with the work activity.

Chapter 4
Firing

4–1. Special firing instructions

a. Conduct of training by military personnel on any training complex will conform to this pamphlet, or host nation criteria as dictated by the Status of Forces Agreements or other bilateral agreements with the host nation.

b. Special use airspace, specific hazard areas, and all other sensitive or special use areas should be shown on installation maps or overlays.

c. Only personnel trained and qualified in service ordnance will participate in combat training exercises.

d. MACOM commanders; Commander, Marine Forces Atlantic (COMMARFORLANT); and Commander, Marine Forces Pacific (COMMARFORPAC), are authorized to approve the use of foreign nation technical data on foreign nation weapon systems not in the U.S. inventory when used by U.S. forces.

e. When HQDA or COMMARFORLANT/COMMARFORPAC authorizes ICM firing, it will be fired only into high-hazard (Marine Corps sensitive fuze) impact areas. Personnel are not permitted to maneuver in this area without approval of HQDA or COMMARFORLANT/COMMARFORPAC. Impact areas used for ICM firing are considered as dangerously contaminated. Ranges that already have ICM or submunition duds are permanently contaminated and will not be cleared by Army EOD personnel or entered by Army range personnel for range maintenance. Marine Corps EOD personnel and supporting Marine Corps personnel of any MOS are authorized access into ICM contaminated impact areas to conduct range clearance operations and to conduct MOS proficiency training. Marine Corps EOD personnel will accompany supporting personnel at all times while in the ICM contaminated area.

f. On U.S. Army facilities, the use of “skip plates” (metal plates placed to protect target mechanisms) is discouraged, except as part of a bullet containment system. Target protection systems and bullet traps must be designed and emplaced so as to reduce ricochet risk and maximize round containment.

4–2. Warning signs and signals

a. Warning signs and signals will be used to warn personnel approaching a firing area. Scarlet danger flags supplemented by blinking red lights at night or during reduced visibility will be displayed from a prominent point.

b. Signs warning personnel of the danger from projectiles, bombs, lasers, and duds will be posted near the firing area at all times.

c. Individual vehicles, tanks, fighting vehicles, and armored personnel carriers will display flags to show the vehicle’s weapon status in accordance with the appropriate field manual. Installation commanders may allow the installation RCO to approve vehicles on a battle run not to display status flags, based on a range control approved risk management plan.

4–3. Firing conditions for ADA guided missiles and rockets

a. When units are firing at independent locations in the same general area, a commissioned OIC will be responsible for each independent firing location.

b. Safety at each firing location is the responsibility of the SRSO. An RSO and trajectory safety officer will be designated to assist the SRSO. Additional personnel may be detailed to assist the SRSO as required.

c. Situations may arise that are not addressed in this pamphlet, but that, in the opinion of the SRSO, may result in an unsafe condition. Conversely, situations may arise in which firing a missile or rocket, rather than destroying a missile or rocket in flight, is considered the safest course of action. The decision must be made locally based upon prevailing conditions.

d. Guided missiles and rockets will not be launched on a trajectory that allows the missile or rocket to pass over personnel or materiel, except as specifically authorized by the installation range control officer, this pamphlet, and the appropriate TM.

e. Guided missiles and rockets will be fired within a time limitation (window) established by the installation range control organization. If firings cannot be accomplished within the prescribed window, a new firing schedule will be obtained.

f. Intermediate and high altitude (for example, Hawk (Army) and Patriot) guided missiles fired for training or target

practice will be equipped with self-destruct systems capable of destroying the missile during flight or terminating the trajectory in a safe area.

g. Missiles equipped with inert or practice warheads will be provided with a system capable of terminating the powered trajectory or destroying the aerodynamic characteristics of the missile to ensure its destruction.

h. When a flight termination system is used to control a system's SDZ, the trajectory safety officer will have the capability to command destruct missiles independently of all actions of firing and trajectory control crews.

4–4. Firing conditions for antitank guided missiles and rockets

a. Command link guidance wires will be recovered unless approval is granted from the installation range control officer to abandon wires in place. Ground personnel will make recovery of guidance wires. Helicopters will not be used to recover command link guidance wires. The installation commander will determine whether guidance wires will be recovered from dedicated and high-hazard impact areas.

b. Access to installation training complexes where command link guidance wires are used will be strictly controlled. Access will be at the authorization of the installation range control officer.

4–5. Safety requirements for firing aerial pyrotechnics (Marine Corps only)

a. Personnel participating in exercises that include the firing of aerial pyrotechnics such as smokey Sams, smokey guns, and so forth, will wear individual protective clothing and equipment to include helmet (and liner if applicable), flak jacket, and other protective equipment required by SOPs.

b. Inspect smokey Sam rockets prior to use and report all rockets that appear to have moisture damage. Damaged rockets will not be fired.

c. When firing these pyrotechnics, anyone may stop the firing sequence if it is not safe to fire, or if the dispensing aircraft is within 2,000 ft (bubble of safety) as prescribed in NAVAIR TM 11–75–63.

d. Nonlethal weapons and munitions are not designed to kill. However, they may be lethal if not employed in accordance with appropriate instructions and restrictions.

Chapter 5
Targets

5–1. General requirements for moving targets

a. Firing any weapon system when it is pointing at or ahead of a towing vehicle, aircraft, or vessel is prohibited.

b. Communication between the towing vehicle, aircraft, or vessel and the firing position will be maintained. Loss of communication will result in an immediate cease-fire.

c. During night firings, towing vehicles, aircraft, and vessels will carry lights to mark their position. Firing on an airborne target is permitted only when both targets and towing vehicles are visible from firing positions.

d. Firing at manned target vehicles designed by AMC with any weapon system other than that for which the vehicle was intended is prohibited. CG, AMC, has the authority to authorize fire on target vehicles with altered weapon systems.

5–2. Airborne and ground targets

a. Weapons systems, including guided missiles and rockets, will not be fired at manned airborne or ground targets, or at targets towed by manned vehicles or aircraft unless specifically authorized by HQ, AMC, and approved by the installation commander.

b. In certain types of command guidance systems, the "burst offset" technique may be employed against manned targets when the burst offset is at least 1,000 mils (56.25 degrees) and is specifically approved by the respective MACOM.

5–3. Waterborne targets

a. The field of fire will be observed to ensure the firing range or weapons training facility is clear during firing. Communication between safety observers and firing positions is required. When firing is to commence, observers will be notified immediately, and when the field of fire is no longer safe, the RSO will be notified immediately. The RSO may authorize direct communication between observers and firing location.

b. When firing at waterborne targets towed by manned vessels, the range OIC will ensure that—

(1) Firing is prohibited when the angle between the target path and the line joining the target and battery is less than 40 degrees.

(2) The length of the towline is at least 3 percent of the range (distance) from the firing position to the target when the direction is given to the weapon system by aiming the sight at the target. In no case will it be less than 275 m.

(3) The length of the towline is at least 3 percent of the range (distance) from the firing position to the target when

the direction is given to the weapon system by aiming the sight at an azimuth circle or aiming point other than the target. In no case will the length be less than 460 m.

5–4. Radio controlled targets

a. Left and right limits of fire for each weapon system and any restricted areas within the field of fire will be clearly defined. Limit markers will be placed downrange so they are clearly visible.

b. The RSO will restrict the firing of weapon systems to safe areas within the field of fire.

5–5. Aerial targets

a. Pertinent data and flight patterns of aerial targets will be determined prior to flight of the missile.

b. Aerial targets will be launched away from public traffic routes with a flight path no closer than 500 m horizontal distance to public traffic routes.

c. When aerial targets are flown between sunset and sunrise, they will be equipped with anticollision lights and red and green navigation lights. The installation RCO may authorize deviations from this requirement for operations contained within the boundaries of installation restricted airspace. Lights will be configured in accordance with standard aircraft lighting requirements. Recovery of aerial targets will begin immediately if any lights fail after launch. This requirement does not apply to aerial targets used for missile firing.

d. Warning systems will be established to alert firing personnel if target control is lost. If target control is lost, aircraft observers will note the last position of the target missile, and the target controller will immediately report the loss to the RSO, who will report the incident to the OIC and range control.

e. Target missile flights will be contained within the special use airspace assigned to the installation. Exceptions will be coordinated through the installation AT&A officer and the DARR to the FAA at least 90 days in advance.

f. Radar surveillance is required when employing aerial targets within special use airspace. Exceptions to this requirement are permitted only when aerial targets are flown within sight of the target controller. In this case, a minimum of two observers with communications directly to the target controller must be posted to observe any unauthorized manned aircraft penetration of the airspace.

g. The installation commander is authorized to eliminate the use of radar surveillance for STINGER and or ballistic aerial targets, on the basis of risk assessment.

5–6. Ballistic aerial targets

a. When launching ballistic aerial targets in surface winds greater than 30 knots, the boost-coast configuration will be used.

b. SDZ requirements for launching ballistic aerial targets are given in table 5–1 and figure 5–1. The dimensions for areas *A* and *B* are 260 m.

Table 5–1
Ballistic aerial target system surface danger zone

Configuration	Distance *X* (in meters)
Boost-coast	3,332
2 booster-sustainers	4,526
3 booster-sustainers	6,067
4 booster-sustainers	7,135
5 booster-sustainers	7,998

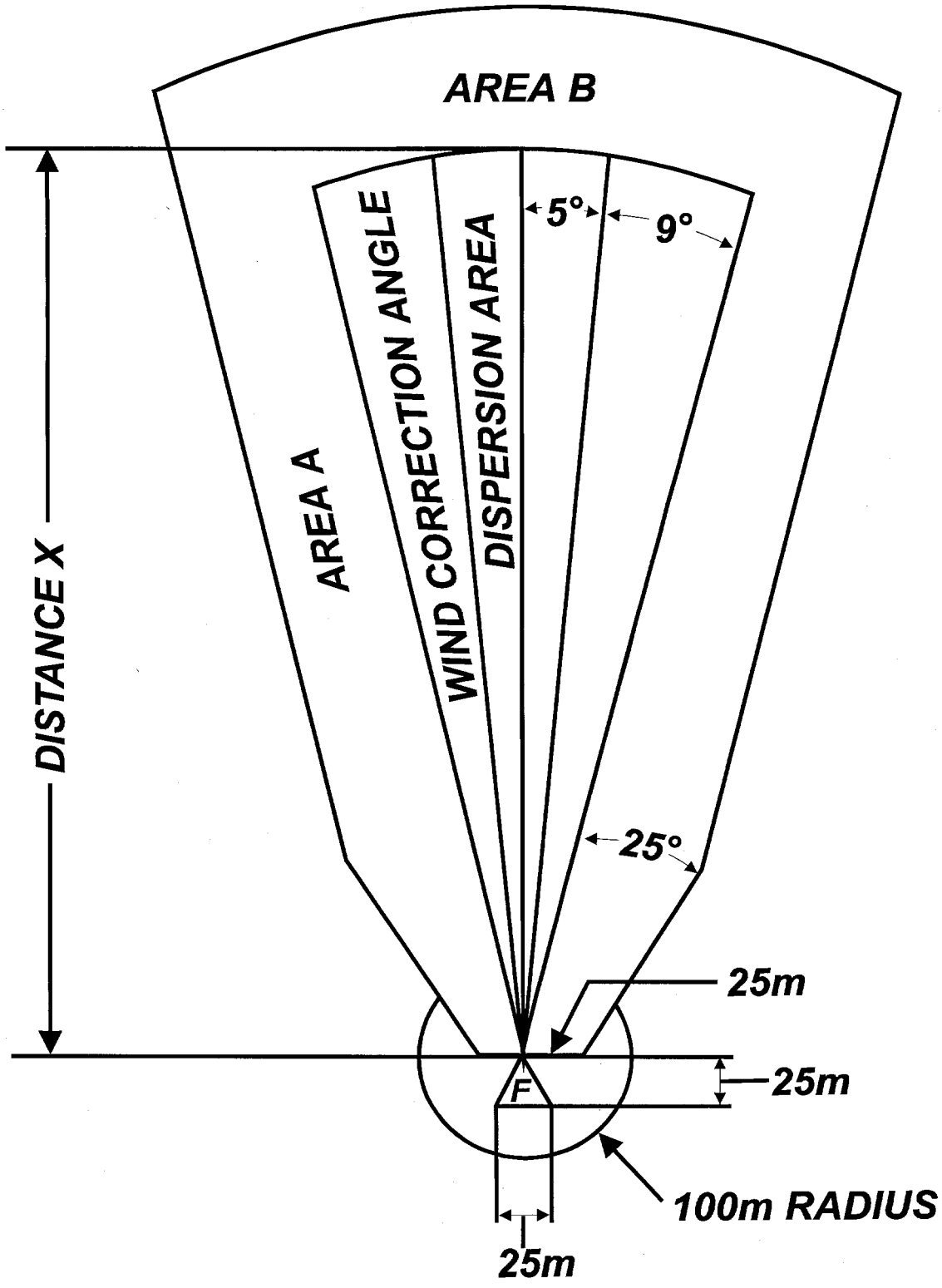

Figure 5–1. SDZ for firing ballistic aerial target systems

Chapter 6
Small Arms

6–1. Firing conditions

a. Range safety information and small arms SDZs in this chapter, direct-fire weapons SDZs in subsequent chapters, and appendix B are the Army standard. When designing ranges that involve fire and movement, or where ricochet hazards outside the range complex boundary may endanger nonparticipating personnel or the general public, SDZs in appendix B should be used.

b. All personnel within the hearing hazard zone will wear approved single hearing protection. The size of the hazard zone varies with the weapon. For mixed-use ranges, it is usually convenient to establish the zone based on the loudest weapon used. For administrative convenience, the size of the hearing protection zones can be increased to encompass areas within convenient access or demarcation points. For the Army, the installation commander may, based on risk management, reduce or eliminate the requirement for hearing protection, if the decision is that reduced hearing created by use of hearing protection outweighs its values. These decisions must be annotated in the affected soldiers' health records. The Marine Corps requires that all personnel exposed to gunfire or artillery or missile firing, under any circumstances, will wear hearing protective devices. The following list of distances to the hazard contours for common military weapons is conservative:

(1) 0.50 caliber: 55 m to the side, 12 m to the rear.

(2) 0.45 caliber: 12 m to the side, 4.5 m to the rear.

(3) 9 mm: 9 m to the side, 6 m to the rear.

(4) 7.62 mm: 20 m to the side, 8 m to the rear.

(5) 5.56 mm: 24 m to the side, 6 m to the rear.

c. Approved eye protection (or eye armor) will be worn, especially during force-on-force training maneuvers or scenarios. The installation commander may, based on risk management, reduce or eliminate requirement for eye protection, if his/her decision is that reduced vision created by use of eye protection outweighs its value.

6–2. Overhead fire

a. Overhead small arms fire above protected troops is authorized when minimum protection shown in table 6–1 is provided. Table 6–1 shows the thickness of various materials needed to positively protect against individual projectile impacts. The material thickness will provide adequate protection against single round impacts, but not automatic fire. The data shown for 5.56-mm are for M193 Ball ammunition. The 5.56-mm M855 Ball ammunition may have greater penetration. AMC is currently testing the 5.56-mm M855 Ball ammunition for penetration capability and will develop and publish amended protection data (if required) as soon as possible.

Table 6–1
Minimum thickness of material for positive protection against caliber ammunition listed

Nature of cover	Thickness, in centimeters, by ammunition caliber		
	5.56 mm M193	7.62 mm	.50 cal
Concrete (5,000 psi)	12.7	17.8	30.5
Broken stone	35.6	50.8	76.2
Dry sand	40.6	61.0	81.3
Wet sand	63.5	91.4	121.9
Wire oak logs	71.12	101.6	142.2
Packed earth	81.3	121.9	152.4
Undisturbed compact earth	88.9	132.1	167.6
Freshly turned earth	96.5	142.2	182.9
Plastic clay	111.8	165.1	254

b. Overhead fire above unprotected troops with small arms may be conducted when authorized by the installation commander and specifically approved by the installation range control officer.

c. Weapon systems authorized for overhead fire of unprotected troops are 5.56-mm, 7.62-mm, and .50 caliber machineguns on ground tripods or vehicle mounts (ring mount excluded) firing from a stationary position. Overhead fire of unprotected troops from Marine Corps high multipurpose wheeled vehicles (HMMWV) is not authorized.

d. Only ammunition certified as cleared for overhead fire in TB 9–1300–385/NAVSEA TWO24–AA–ORD–010 will

be used. NSN and DOD Ammunition Code identify small arms ammunition certified for overhead fire of unprotected troops.

e. Hand-held, shoulder-fired, or flex-mounted weapon systems will not be fired over the heads of troops on infiltration courses.

f. Rates of fire will not exceed 70 rounds per minute for 5.56-mm and 7.62-mm machineguns and 40 rounds per minute for .50-caliber machineguns. Tracer ammunition may be used to assist in monitoring projectile paths.

g. Overhead fire with machineguns in live-fire exercises will be as follows:

(1) Firing positions for weapons delivering overhead fire will provide unobstructed field(s) of fire.

(2) Applicable ballistic tabular firing tables will be used to determine the minimum angle of elevation for all overhead fire. Projectiles will not be permitted to impact between the firing position and unprotected troops downrange. All impacts will be at least 30 m beyond the personnel most distant from the weapon.

(3) Positive stops must be used to prevent crossfire and depression of weapon systems during overhead firing.

(4) Weapon systems will be test fired before delivery of overhead fire to verify the effectiveness of positive traverse and depression stops.

(5) Minimum vertical clearance requirements established in paragraph 6–2*h*(3) apply.

h. The following precautions will apply to overhead fire with machineguns on infiltration courses.

(1) Firing will be from approved platforms, using the M142 mount.

(2) Mounts and weapon systems will be inspected by qualified field maintenance personnel before being declared safe to deliver overhead fire.

(3) A minimum vertical clearance of 2.5 m over the heads of unprotected troops or the highest obstruction within the field of fire will be maintained. This minimum vertical clearance is the distance between the lowest shot in the dispersion pattern as determined by test firing and the highest point of ground, log, or other obstacle over which troops must travel or heights of barbed wire strands or posts on the course, whichever is higher.

(4) Weapons will be positioned so that the direction of fire prevents projectiles from striking trees or any other obstacles in the vicinity of unprotected troops. Projectiles will impact at least 30 m beyond the most distant personnel on the course from the weapon.

6–3. Flanking fire

a. Ground-mounted or vehicle-mounted small arms may be used to provide low angle flanking fire when a minimum angle of 15° between the limit of fire and exposed troops is maintained.

b. Positive means will be employed to ensure that the firing unit knows the location of the maneuver units while fire support is being provided.

c. The route and location of maneuver units and the location of the weapons providing flanking fire support will be described in detail using recognizable natural and/or manmade terrain features, or other positive identification features to all involved personnel.

d. Because of the danger of lateral ricochets, flanking fire should be planned using the SDZ data in appendix B. However, if this is not feasible, the following minimum conditions apply:

(1) Weapons will be mounted on ground mount tripods or vehicle mounts.

(2) Projectiles must not impact any closer to unprotected personnel than 100 m.

(3) Only nonexplosive and nondiscarding sabot projectiles may be used.

(4) An angle of 15° or more must be maintained between the limit of fire and near flank of the closest individual or maneuvering unit.

6–4. Shotgun ranges

a. Skeet and trap range plans may be found in the folio of standard drawings, appendix E of file no. 750–90–01, “Planning and Design of Indoor and Outdoor Sports Facilities”, published by U.S. Army Engineering Support Center, Huntsville, AL 35807–4301.

b. Training used for shotgun firing will be according to SDZ requirements in figure 6–1 and table B–1.

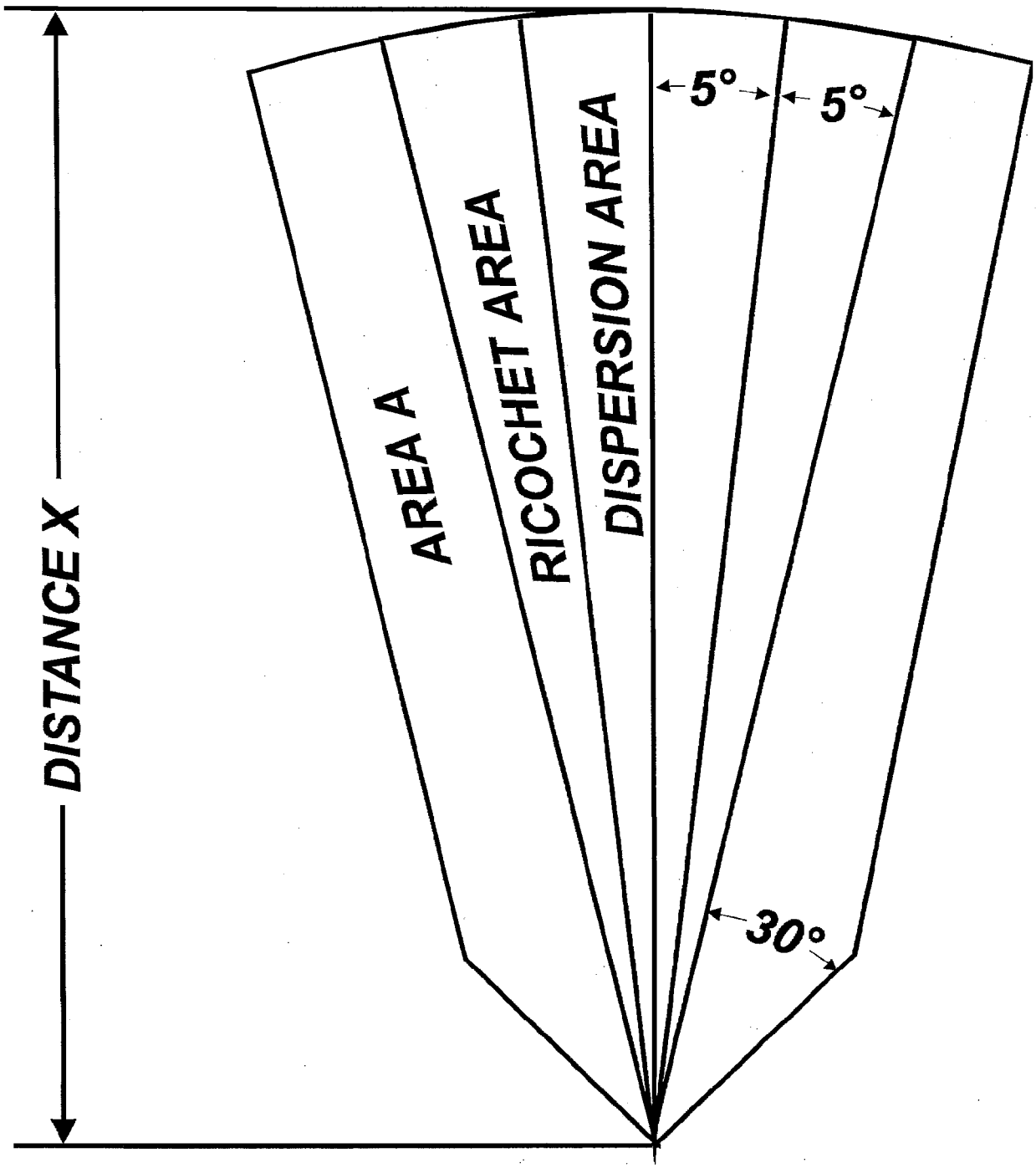

Notes:
For distance *X,* see appendix B, table B–1.
Area *A* = 100 m.

Figure 6–1. SDZ for firing small arms, machineguns, and shotguns firing at a fixed ground target

6–5. Surface danger zone

a. Figure 6–1 depicts the SDZ for small arms, machineguns, and shotguns firing from a single firing position along the line of fire, also known as gun target line (GTL) to a single target.

b. When the nature or extent of training requires multiple firing positions, the SDZ in figure 6–1 will be bisected longitudinally and the GTL expanded to accommodate multiple targets. This establishes left and right limits of fire.

c. When the nature or extent of training requires moving targets, the SDZ in figure 6–1 will be bisected longitudinally and the GTL expanded to accommodate moving targets. This establishes the left and right limits of fire.

d. Live-fire maneuver areas requiring multiple or composite SDZs must be constructed on the basis of each weapon, ammunition, and target engagement scenario. (See appendix C.)

6–6. Blank ammunition

a. The following precautions will be observed during the use of blank ammunition:

(1) The blank firing attachment (BFA) is a necessary component for operational safety. Weapon systems for which approved BFAs are manufactured will not be fired without the proper BFA. The distance at which weapons can be safely fired at unprotected troops without causing injury is somewhat reduced with the BFA. However, 5 m safe separation distance (SSD) will not be reduced. This distance, with a dispersion angle of 10 degrees left and right of the GTL, does not exclude possible injury to the unprotected eye. Hearing protection (ear plugs) should be worn while firing blank ammunition.

(2) Army-issue battle dress uniforms offer skin protection and should be worn at all times. Eye protection should be used by the firer.

b. A violation of the SSD could result in serious injury. If the SSD is decreased to within 0.9 meters), fatal injuries may occur.

6–7. Recreational ranges

Procedures contained in this pamphlet as they apply to risk management, safety certification, range usage, and deviation procedures will be used to mitigate or resolve safety issues or conflicts for recreational ranges located on government property.

Chapter 7
Grenades and Grenade Launchers

7–1. Hand grenades

a. High explosive loaded type grenades. These contain explosive charges that detonate after a short delay (3 to 5 seconds). Every precaution will be taken to prevent injury from flying fragments. For training purposes, fragmentation and offensive hand grenades will be thrown from a trench or barrier equivalent to a screen of sandbags 0.5 m thick. When throwing bays are used for protection, they will be built to a minimum height of 1.5 m high and wide enough to accommodate one thrower and one ARSO. Bay height may be reduced to less than 1.5 m if approved by the installation commander. However, it must provide positive protection against high-velocity, low-angle fragments. (See FM 3–23.30 for other dimensions and additional information.) Throwing bays will be separated from adjacent bays by a distance of 20 m. If this requirement cannot be met, throwing bays may be separated from one another by physical barriers (that is, earthen berms, concrete walls, or wooden revetments) long and high enough to attenuate high-velocity, low-angle fragments.

b. Firing conditions for fragmentation and offensive grenades.

(1) Personnel within the 150-m danger area when casualty-producing hand grenades are thrown will wear approved protective helmets, protective body armor (flak jackets), single hearing protection, and proper eye protection.

(2) Safety clips on fragmentation and practice grenades will not be removed until immediately before the safety pin is removed. Once the safety pin has been pulled, the grenade will be thrown. No attempt will be made to reinsert the safety pin or tape the safety lever (spoon). The safety lever will not be released for any reason on HE grenades until the grenade exits the throwing hand at the command of the ARSO.

(3) All personnel must be proficient in the safety precautions for handling and throwing grenades before live grenade training begins. Successful completion of practice grenade training (usually referred to as mock bay) is mandatory prior to live grenade training.

(4) OIC, RSOs, and live bay ARSOs for live grenade training events must be certified to perform these duties. Certification will include training detailing actions in the event of a dropped grenade, short throw, grenade thrown other than downrange, SDZ, control of observers, misfire/dud grenade procedures, arming, throwing techniques, and

prelive bay requirements. Marine Corps battalion/squadron commanders are responsible for establishing and maintaining a certification program for their OICs and RSOs commensurate to the assigned duties and responsibilities. Marines Corps battalion/squadron commanders are responsible for certifying OICs and RSOs.

(5) High explosive grenades that fail to function (dud) will not be approached except by EOD personnel. During training, if a grenade fails to explode, the throwing of live grenades in any bay within the uninterrupted fragmentation radius of the dud grenade will cease. Dud grenades will be destroyed by EOD personnel only. Unauthorized personnel will not approach, move, touch, or handle dud grenades.

(6) During demonstrations, fragmentation and blast/concussion type grenades will be thrown from a barricaded position so grenades burst at least 150 m from unprotected personnel.

(7) When direct viewing of hand grenade detonations are required within the 150-m danger area, composite (laminated) viewing ports will be used.

(a) Viewing ports will be constructed to the following criteria or equivalent:

1. 10-mm glass (outside).

2. 7-mm polycarbonate.

3. 6-mm glass.

4. 6-mm polycarbonate.

5. 6-mm glass.

6. 6-mm polycarbonate.

(b) These criteria provide minimum essential one-time protection against worst case fragmentation detonated within 6 m of the viewing port. Additionally, 12.7-mm or equivalent exterior polycarbonate protective sheet (scar shield) should be installed in front of the viewing port. The shield absorbs the majority of damage and is more easily replaced than the entire viewing port.

(8) Live grenades will not be thrown into standing water, deep snow, or dense vegetation.

(9) When training with live grenades in a tire house, trench line, or like environment, and a dud grenade is experienced, all activities within the structure or danger area will stop, personnel will remain within a safe area for a minimum of 5 minutes and then evacuate the structure or area until EOD clears the dud.

(10) Range cadre and commanders are cautioned that multiple employment of grenades in a training scenario significantly increases the difficulty of determining the actual number of grenades that detonated. Dud grenades may be activated by subsequent training, generating an unplanned detonation.

(11) The use of hand grenades during live-fire exercises will conform to the provisions provided by chapter 19.

c. Firing conditions for chemical and incendiary hand grenades.

(1) Chemical grenades will not be held in the hand after the safety lever is released. The incendiary hand grenade may be taped or tied in place if the incendiary effect is desired at a specified location. In this case, safety pins will not be pulled from the grenade until the desired time of functioning. Remote safety pin removal is preferred.

(2) Burning type grenades (riot control, smoke, and incendiary) are ignited by pulling the safety pin and releasing the safety lever. After the safety pin has been pulled, the safety lever will not be released until the grenade exits the throwing hand. Once the safety lever is released there is no way to stop the grenade from functioning. When the burning type grenade is fired in place, the firer will keep his/her face turned away from the grenade. After releasing the safety lever, the firer will quickly move at least 10 m away to avoid contact with incendiary particles and fumes emitted during burning.

(3) Personnel will be instructed on the proper method of holding the M25 bursting type, riot control grenade, before commencing training exercises. The arming sleeve will remain depressed until the grenade is thrown. M25 grenades will not be thrown closer than 25 m to unprotected personnel.

(4) Burning type grenades burn oxygen. Standard protective masks filter particles but will not supply oxygen. Therefore, burning grenades will not be used in enclosed or confined spaces (such as occupied tunnels) or in other confined spaces into which personnel will enter until those spaces are ventilated. Specific fuze burning delay times and functioning characteristics are in TM 9–1330–200–12 and TM 43–0001–29. (See paragraph 16–3 for safety of use data for chemical smoke.)

(5) Burning type CS grenades will not be fired closer than 10 m to other personnel or 50 m to spectators upwind.

(6) M8, hexachorethane (HC) smoke grenade restrictions are the same as those for HC smoke pots. These grenades will ignite combustible materials and will cause burns. A separation distance of at least 10 m will be maintained from burning grenades. Personnel will wear protective respirators or masks before exposure to any concentration of smoke produced by M8 white smoke grenades. See chapter 16 for detailed information concerning smoke hazards.

(7) Burning particles of white phosphorous are frequently projected from the M15 and M34 grenades to a distance of 40 m from the bursting point. Therefore, M15 and M34 grenades should be thrown only on standard live grenade ranges during training as prescribed in FM 3–23.30. White phosphorous particles cause serious, painful, slow-healing burns. Refer to FM 4–25.11 for appropriate first-aid measures.

(8) Direct viewing of thermite grenades will not be conducted due to the high potential of permanent eye damage.

d. Surface danger zones.

(1) Surface danger zone requirements for hand grenades are provided in figure 7–1.

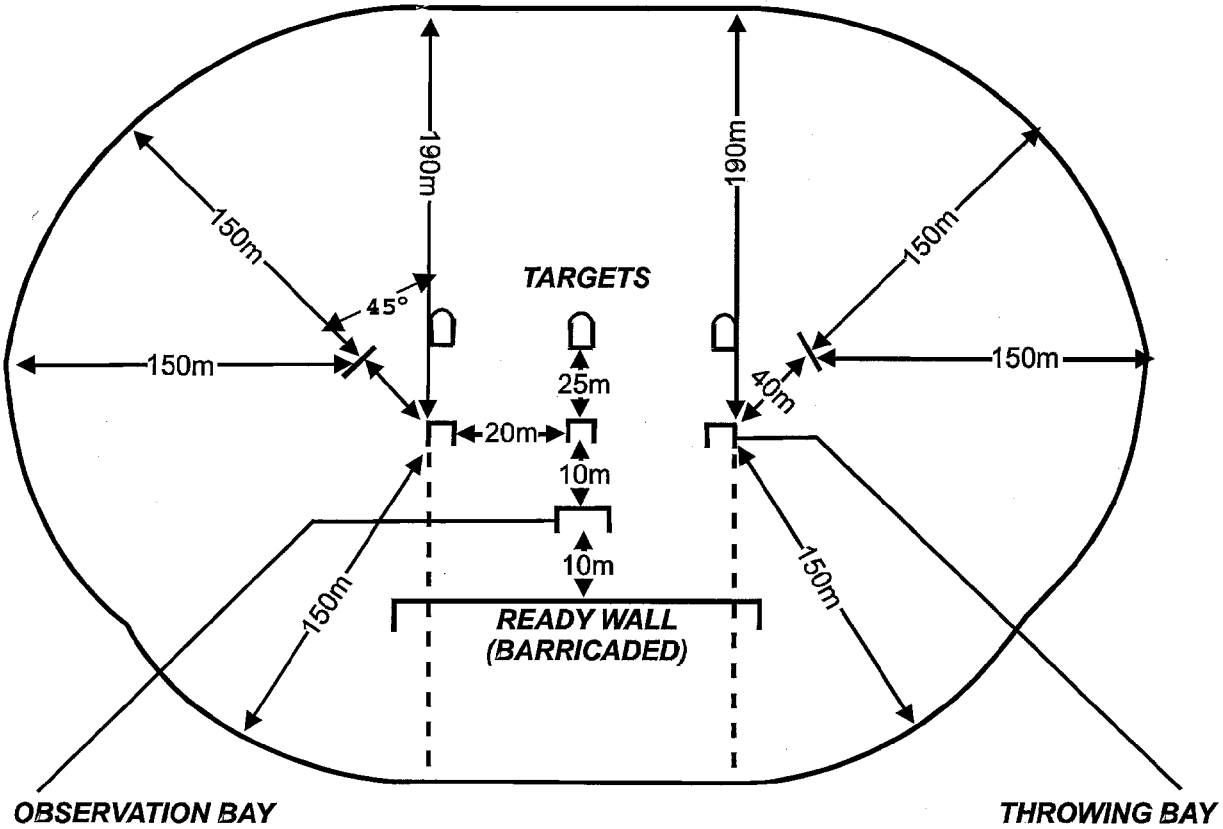

Figure 7–1. SDZ for fragmentation and offensive hand grenades

(2) Planning guidance for hand grenade ranges is in TC 25–8.

7–2. Grenade launchers and grenade machineguns

a. General firing conditions.

(1) Personnel will be instructed in the proper use of grenade launchers and grenade machineguns, and applicable safety precautions before firing with live ammunition.

(2) All duds will be reported by the OIC to the range control office. When fired or launched HE grenades cannot be cleared from an impact area, the impact area must be designated as a dedicated, high-hazard impact area. Dedicated, high-hazard impact areas will be fenced off and posted with signs to warn and keep out unauthorized personnel.

b. Firing precautions for M79/M203 grenade launchers.

(1) Hazardous fragmentation from HE grenade ammunition may be experienced to 165 m from the point of detonation. Appropriate HE no-fire lines will be established. Training practice (TP) ammunition, M781, does not require areas *A* or *B*.

(2) Although 40-mm grenade launchers M79 and M203 are designed to prevent accidental chambering of 40-mm, high-velocity ammunition, OICs and RSOs will ensure only low-velocity grenade cartridges are fired from M79 and M203 grenade launchers.

(3) Single hearing protection will be worn within 2 m of firing these grenade launchers. A helmet and flak jacket must be used while conducting firing of HE M203 40-mm grenades.

(4) Snow depth of 10 cm or more and standing water will increase the potential of 40-mm duds. These conditions must be considered prior to firing.

c. General firing precautions for machinegun, MK19, MOD 3.

(1) Targets will be engaged only at ranges greater than 75 meters with TP ammunition.

(2) Targets will be engaged only at ranges greater than 310 meters with HE ammunition.

(3) Firing through obstructions will be avoided.

(4) Personnel within a 310-meter radius of impact point will wear protective helmet, body armor/flak jacket, and ballistic eye protection at all times.

(5) Range firing procedures and physical setup must be adequate to prevent rounds from impacting closer than 310 meters from the firing vehicle, other vehicles, or personnel.

(6) Firing over open hatches is not authorized. Serious injury can result from burns caused by weapon flash or by expended or ejected cartridge cases striking personnel.

(7) Approved single hearing protection is required for all personnel within the noise hazard contour of a 20-meter radius of the weapon system. Eye protection should be worn.

(8) Daily exposure limit within the noise hazard contour is 1,000 rounds per day.

(9) Army personnel recovering dud 40-mm M918 TP projectiles will follow the procedures outlined in TB 9–1310–251–10. The use of protective goggles or face shield, gloves, and tongs while handling M918 TP rounds is mandatory. Marine Corps EOD personnel recovering the same munitions will follow procedures outlined in EODB 60 series publications.

d. Static firing restrictions for vehicle mounted machinegun, MK19, MOD 3.

(1) A gunner's quadrant and/or MK64, MOD 7, mount depression stop will be used to keep the minimum elevation above 30 mil when firing.

(2) For M998T interim squad carrier—

(a) Soft tops must be installed over the drivers and passenger compartments for safe operation of the vehicle when firing the MK19.

(b) Visual inspection of the adaptive engineering team collar-mounting bolts must be performed prior to, during, and after firing operations. All bolts must be present with nuts firmly tightened prior to firing.

(3) M113 and M106 series armored carriers:

(a) Firing over open hatches is prohibited.

(b) Driver's hatch must be closed when firing off the left side, forward, or off the right side of the vehicle, or when personnel or objects in hatch areas are forward of the weapon muzzle.

(4) M88A1 medium-tracked recovery vehicle:

(a) Operator and mechanic hatches must be closed when firing off the left side, forward, or off the right side of the vehicle.

(b) Personnel doors on the vehicle sides may remain open during firing forward or to the rear, but will be closed when firing to the left or right side of the vehicle.

e. Moving firing restrictions for machinegun, MK19, MOD 3. To preclude unintentional impacts of HE and HEDP ammunition at ranges less than 310 m:

(1) Restrict speeds to not greater than 16 km per hour when firing from the HMMWV M1025/1026 armament carrier and the M998T interim squad carrier over paved and improved roads that are in good condition, and not greater than 8 km over rough roads, trails, and cross country.

(2) Restrict speeds to not greater than 16 km when firing from the M113 and M106 family of armored carriers, and the M88A1 tracked recovery vehicle over roads, trails, and cross country.

f. SDZ.

(1) SDZ requirements for M79 and M203 grenade launchers are provided in figure 7–2. A minimum 6 m separation distance is required between firing positions. Cartridge M433 requires an area *A* and *B* of 165 m. All other M79 and M203 HE cartridges require 130 m, as illustrated in figure 7–2.

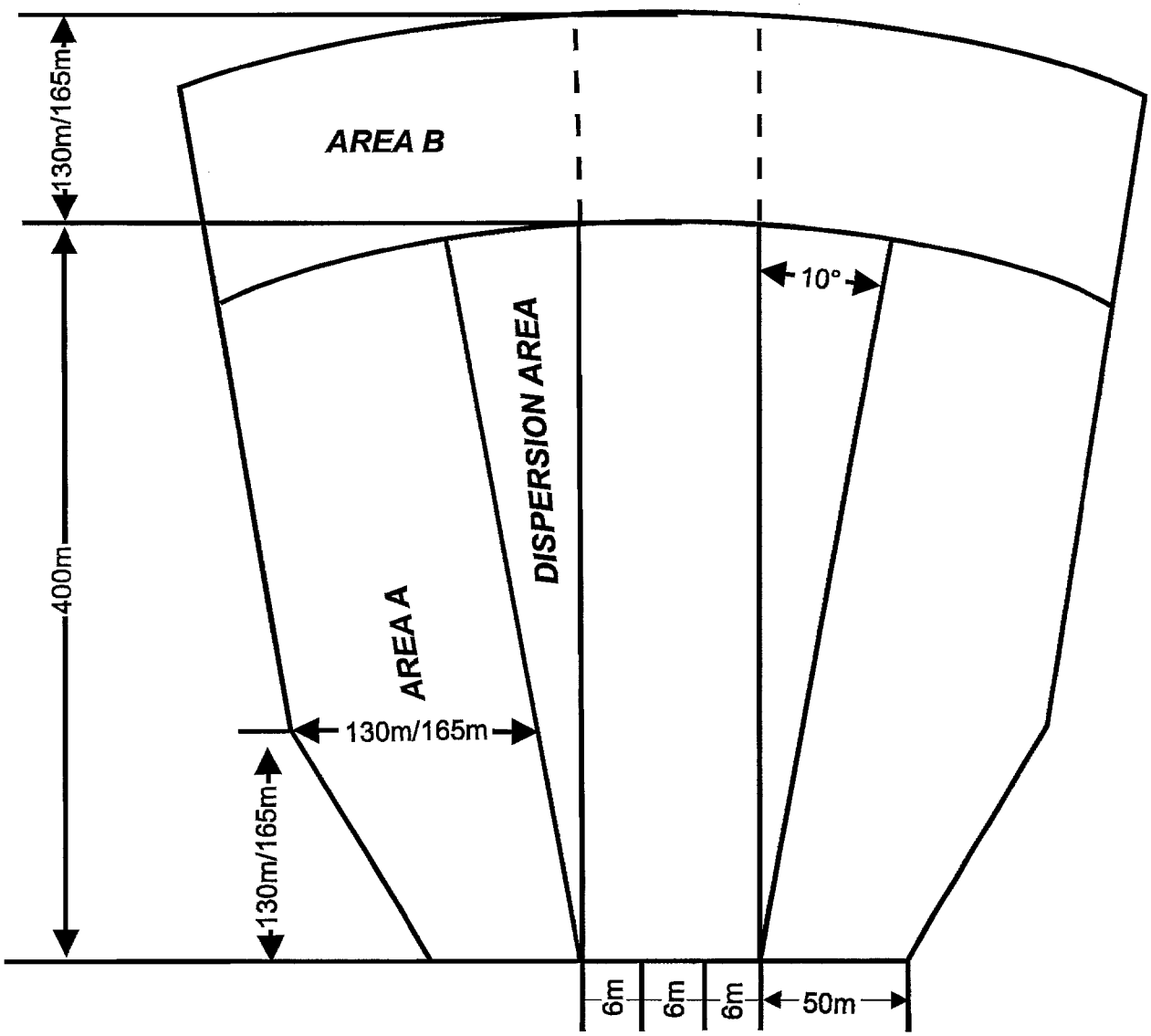

Notes:
[1] Prohibit cross-line firing when using multiple firing.
[2] Maximum range (400 m) may be reduced when positive elevation control devices are used to limit range to impact distance.
[3] Minimum engagement range as well as areas *A* and *B* for the M433, HEDP, is 165 m.

Figure 7–2. SDZ for firing M79 and M203 grenade launchers

(2) SDZ criteria for the machinegun, MK19, MOD 3, are shown in table 7–1 and figure 7–3. Minimum target engagement range for HE cartridges is 310 m.

Table 7–1
Surface danger zone dimensions for 40-mm machinegun, MK19, MOD3

Cartridge	Impact media	Dist *X*	Dist *Y*	Area *W*	Area *A*	Area *B*	Angle *P*°	Angle *Q*°
		(meters)					(degrees)	
M383 HE	Earth	2,095	1,250	167	310	310	23	15
	Armor	2,095	1,250	471	310	310	60	28
M385A1 TP	Earth	1,984	1,250	167	N/R	N/R	23	15
	Armor	1,984	1,250	471	N/R	N/R	60	28
M430 HEDP	Earth	2,037	1,250	167	310	310	23	15
	Armor	2,037	1,250	471	310	310	60	28
M918 TP	Earth	2,095	1,250	167	N/R	N/R	23	15
	Armor	2,095	1,250	471	N/R	N/R	60	28

Legend for Table 7-1:
N/R = Not required

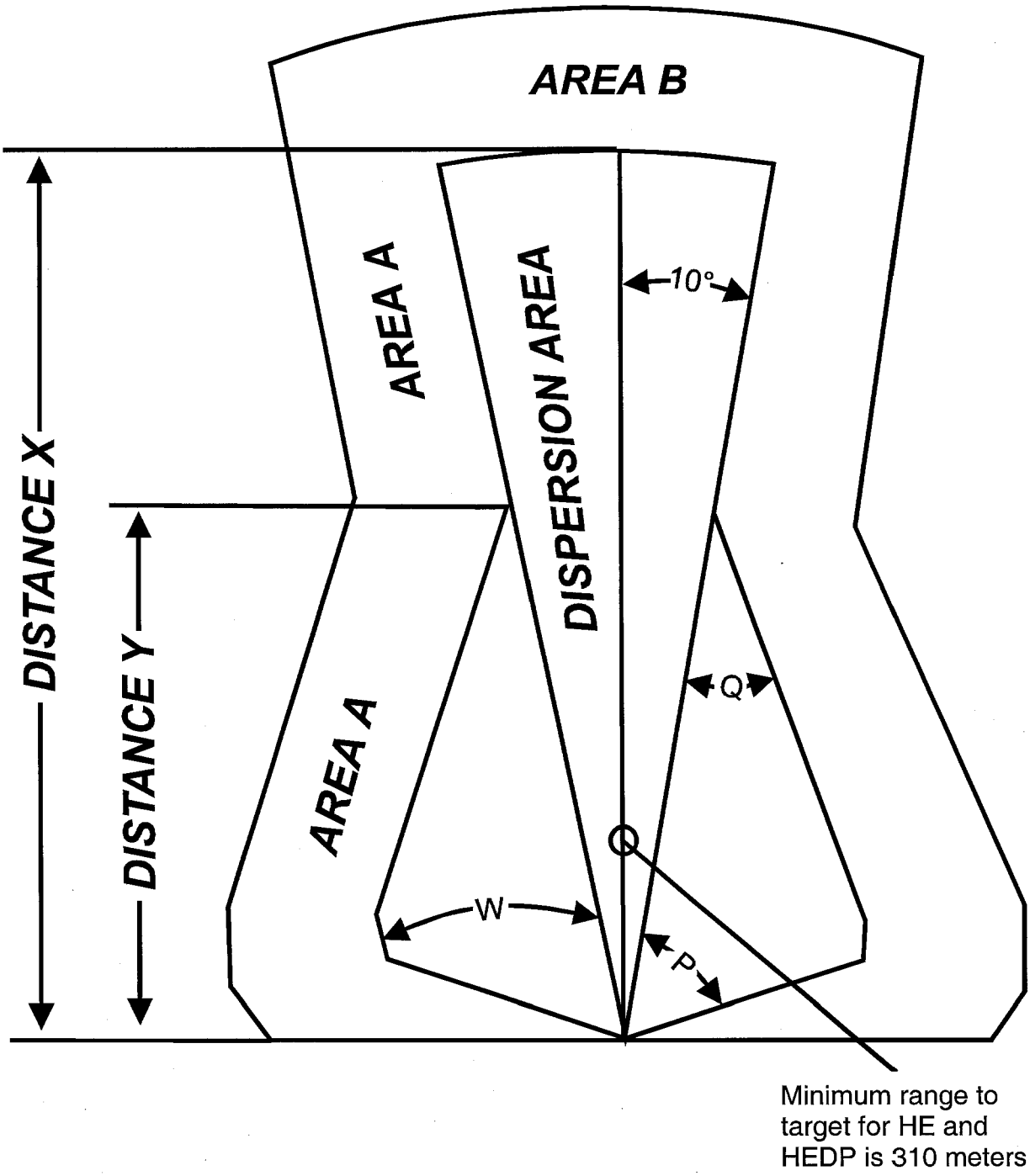

Figure 7–3. SDZ for 40-mm machinegun, MOD 3

Chapter 8
Antitank Rockets

8–1. Firing conditions

a. General.

(1) All loading and unloading for separate loading rockets (for example, 35-mm, M73, practice rocket and 66-mm, M74, incendiary rocket) will be on the firing line with the muzzle pointed downrange. Procedures and precautions in appropriate FMs and TMs will be observed in all preparation and firing operations.

(2) Personnel will not stand or have any portion of the body directly in front of or behind a loaded rocket launcher.

(3) Before firing, the SDZ to the rear of the launcher (area *F*) will be cleared of personnel, materiel (including expended cartridge cases), and readily combustible vegetation. Area *F* for antitank rockets is an isosceles triangle with the apex at the breech and the width of the triangle corresponding with a rearward extension of the gun target line.

(4) The use of manned target vehicles is prohibited when firing HE or HEAT ammunition. Moving target vehicles must be operated by remote control. Unprotected operating personnel will be located outside the SDZ.

(5) Approved single hearing protection will be worn by personnel within 390 m of the firing point when firing antitank rockets. Approved single hearing protection will be worn by personnel within 500 m of the firing point when firing HE, HEAT, TP, smoke, and illumination from Range Antiarmor Weapon System (RAAWS)/Multirole Antiarmor Antipersonnel Weapons System (MAAWS). The gunner and all other personnel within a 100-m radius of the MAAWS must wear properly inserted foam earplugs (NSN 6515–00–137–6345) as well as properly fitting ear muffs (double hearing protection). Eye protection should be worn. For the Marine Corps, helmet and flak jacket are required when firing the AT–4 and shoulder mounted antitank weapon.

b. Special firing conditions.

(1) When a 66-mm, M72, light antitank weapon is fired in temperatures below freezing, all back blast areas (area *F*) will be doubled. Firers should wear approved face protection during firing.

(2) Rockets, RAAWS/MAAWS, or AT–4s will not be fired from within buildings unless fired in accordance with FM 3–06.11 or within 50 m of a vertical or nearly vertical backstop, barrier or obstacle because of the risk of debris ricochets. Additional firing precautions for RAAWS/MAAWS are on the web at http://w4.pica.army.mil/Picatinny/.

(3) Prone or foxhole firing of HE AT4 (M136) is not authorized. In training, an individual may fire one round from the sitting position or three rounds from the standing or kneeling positions in a 24-hour period.

(4) Prone firing of HE or TP ammunition in the RAAWS/ MAAWS is not authorized because of overpressure hazards.

(5) The firing of antitank rockets over unprotected troops from a moving vehicle or aircraft is not authorized.

8–2. Surface danger zone

a. SDZ requirements, including minimum target engagement distances, for antitank rockets are in tables 8–1 and 8–2 and figure 8–1.

Table 8–1
Antitank rocket launcher SDZ criteria, in meters

Weapon	Area *A*	Area *B*	Minimum range to impact[1]	Distance *X*[2]	Area *F*	
					Depth	Base
66-mm HEAT, M72	250	250	75	1,000	40	25
66-mm incendiary, M74	100	100	50	1,000	40	38
35-mm subcaliber, M73	100	100	50	1,150	40	25

Notes:

[1] Minimum range to impact (minimum target distance) may be reduced 60 percent when firing nonexplosive warhead from unprotected positions or explosive warhead from protected positions.

[2] Distance *X* may be reduced if there is steeply rising terrain behind the target or overhead baffles and positive controls are used to limit elevation of the launcher at the firing position. A formal deviation must be approved to reduce distance *X*. See table 8–2.

Table 8–2
Maximum ranges at various quadrant elevations (QE) for the 35-mm M73 practice rocket

Elevation (degrees)	**Range** (meters)	**Maximum ordinate** (meters)
5	343	8
10	591	30
15	776	62
30	1,082	203

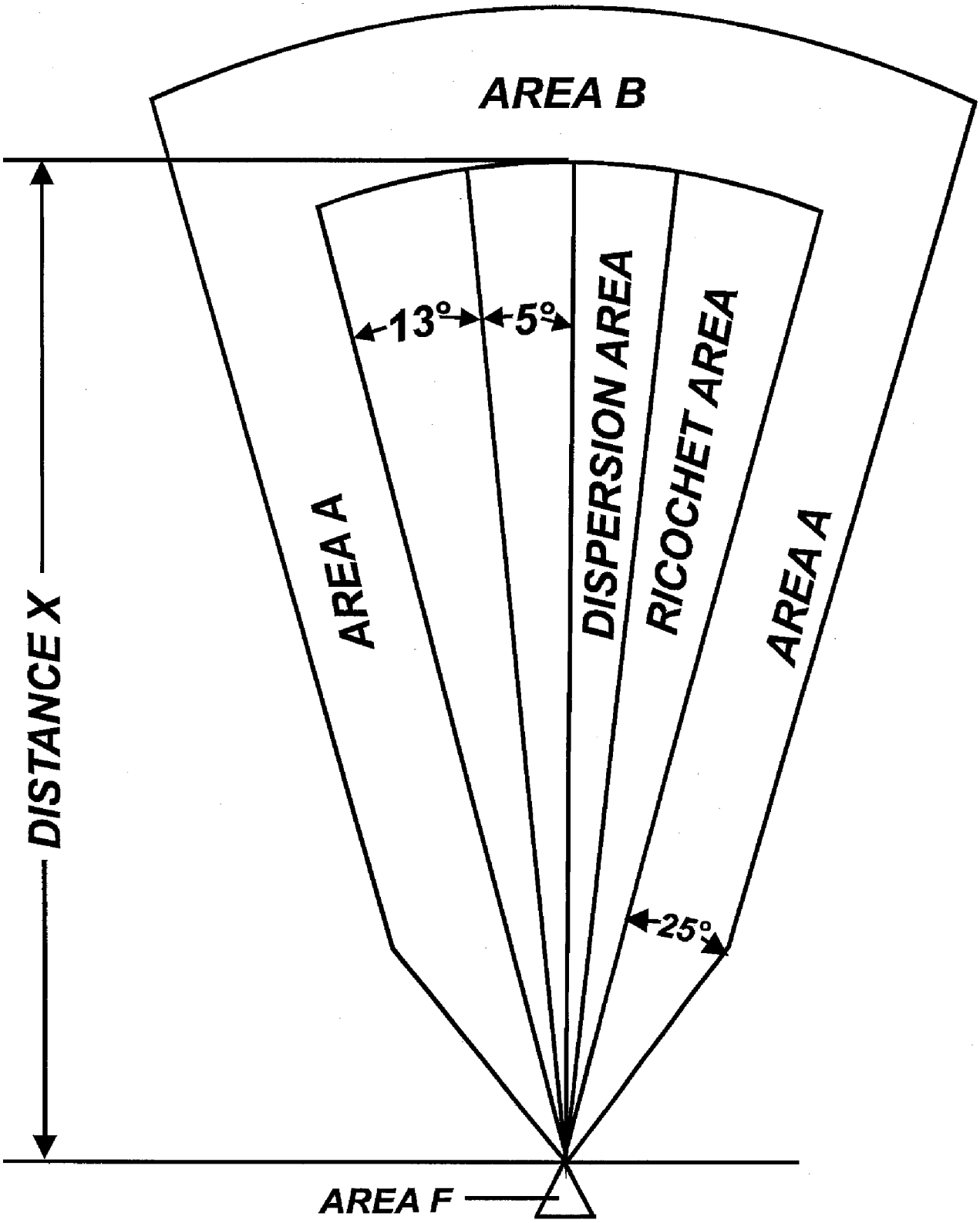

Figure 8–1. SDZ for firing rocket launchers

b. SDZ requirements for RAAWS/MAAWS are in table 8–3 and figures 8–2 and 8–3. Bat wing SDZ for RAAWS/MAAWS is in appendix B.

Table 8–3
RAAWS/MAAWS SDZ criteria, in meters

Type	Distance *X*	Minimum range to impact[1]	Ricochet angle	Area *A*	Area *B*	Area *F*[2] danger zone depth[3]	Area *F*[4] caution area
HE	2,600	250	13°	400	400	40	60
HEAT	3,200	50	38°	150	150	40	60
HEDP	2,000	150	12°	330	330	40	60
TP	3,200	50	13°	100	100	40	60
Smoke	2,600	150	13°	150	150	40	60
Illum[5]	2,900	N/A	N/A	100	100	40	60
7.62 mm	4,100	N/A	5°	N/A	N/A	N/A	N/A

Legend for Table 8-3:
N/A = not applicable

Notes:
[1] May be reduced 60 percent when firing nonexplosive projectiles from unprotected firing positions or explosives projectiles from protected positions.
[2] Area *F* is a 90° angle (45° left and right) of rearward extension of launcher target line.
[3] Danger zone occupation could result in fatalities or serious casualties including severe burns or permanent hearing loss. The hazards are base plate fragments, debris, fireball, high noise levels, and overpressure.
[4] Caution area is an extension of the primary danger zone. Occupation of this area could also result in severe casualties due to back blast, debris, high noise levels, eye injuries, and possible base-plate fragments. Primary danger area and caution area are conditions that may not be modified.
[5] Not a direct fire round. Use figure 8–2 to construct SDZ.

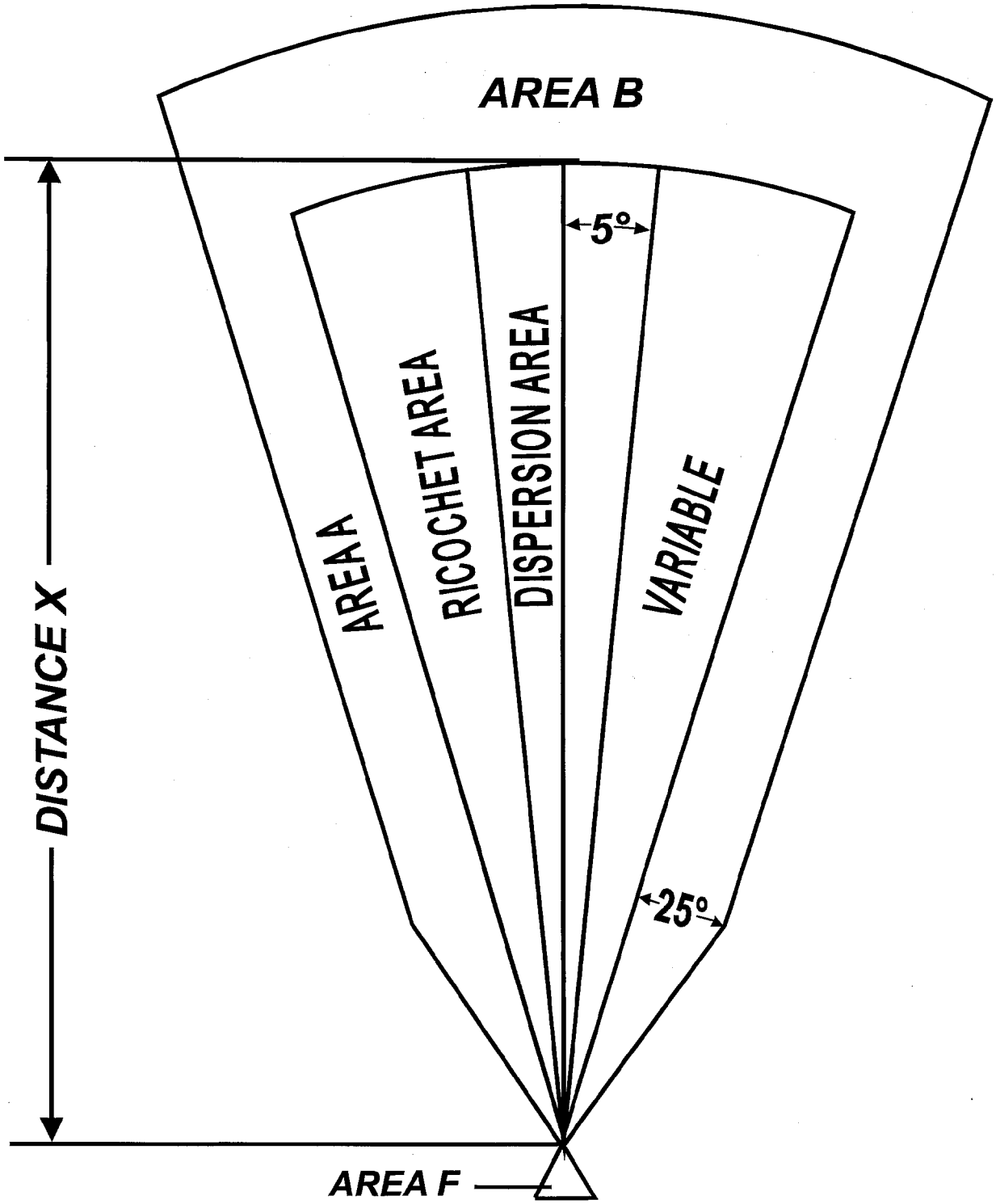

Figure 8–2. SDZ for firing RAAWS

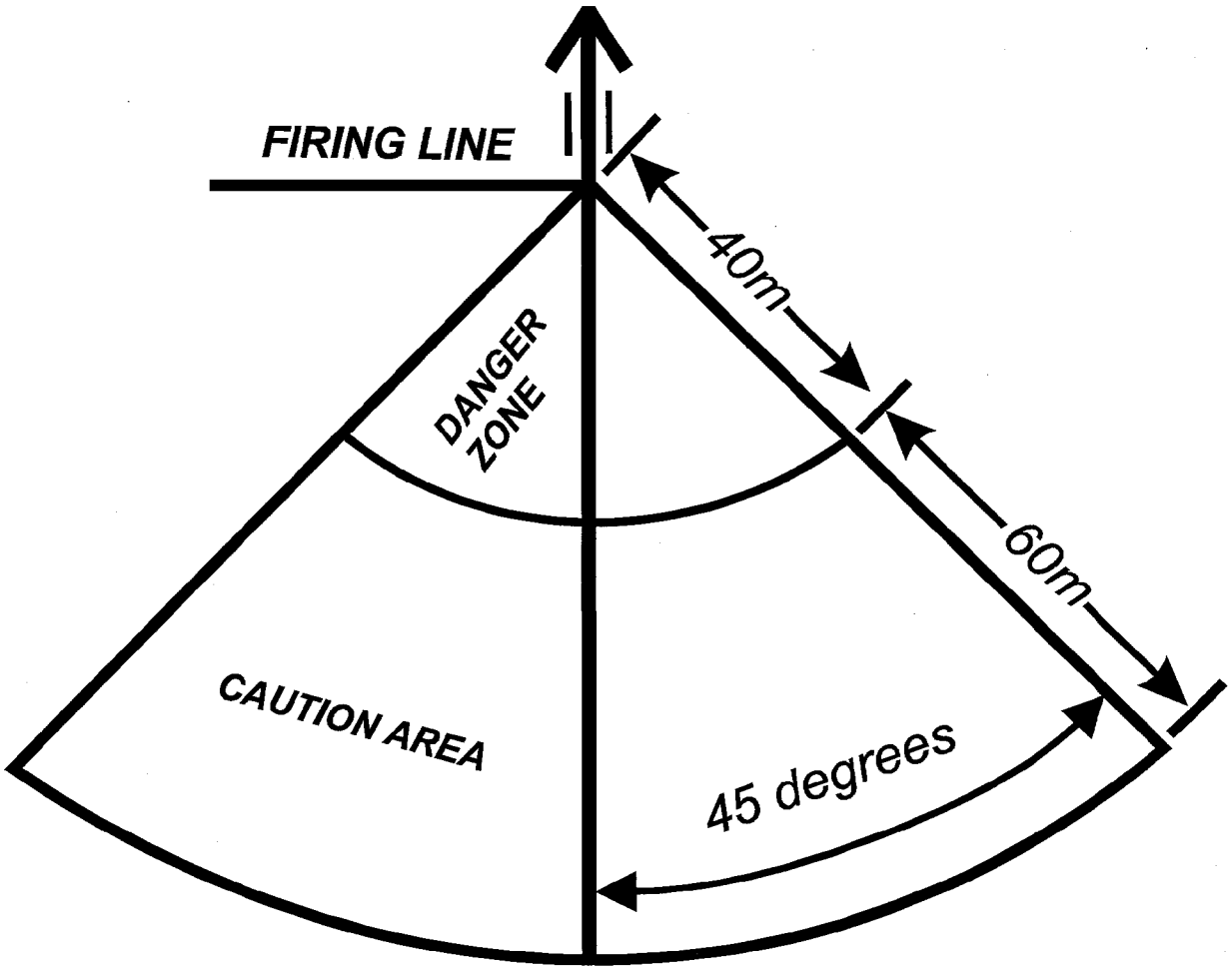

Figure 8–3. SDZ, area *F* for firing RAAWS

c. SDZ requirements for AT–4 are in table 8–4 and figures 8–4 and 8–5.

Table 8–4
AT–4 surface danger zone criteria, in meters

Type	Distance *X*	Minimum range to target	Area *A*	Area *B*	Area *F*[1]	
					Danger zone depth	Caution area depth
84-mm HEAT M136	2,100	50	227	488	5[2]	95[3]
9-mm Trainer, M939	1,600	N/A	N/A	N/A	N/A	N/A

Legend for Table 8-4:
N/A = not applicable

Notes:
[1] Area *F* is 90° angle (45° left and right) of rearward extension of launcher target line.
[2] Danger zone occupation could result in fatalities or serious casualties including severe burns, eye damage, or permanent hearing loss. The hazards are base plate fragments, debris, fireball, high noise levels and overpressure.
[3] Caution area is an extension of the primary danger area. Occupation of this area could also result in severe casualties due to back blast, debris, high noise levels, and possible base-plate fragments. Primary danger area and caution area are conditions that may not be modified.
[4] Increased dud rates may occur when firing HE (M136) at impact angles of 10° or less.

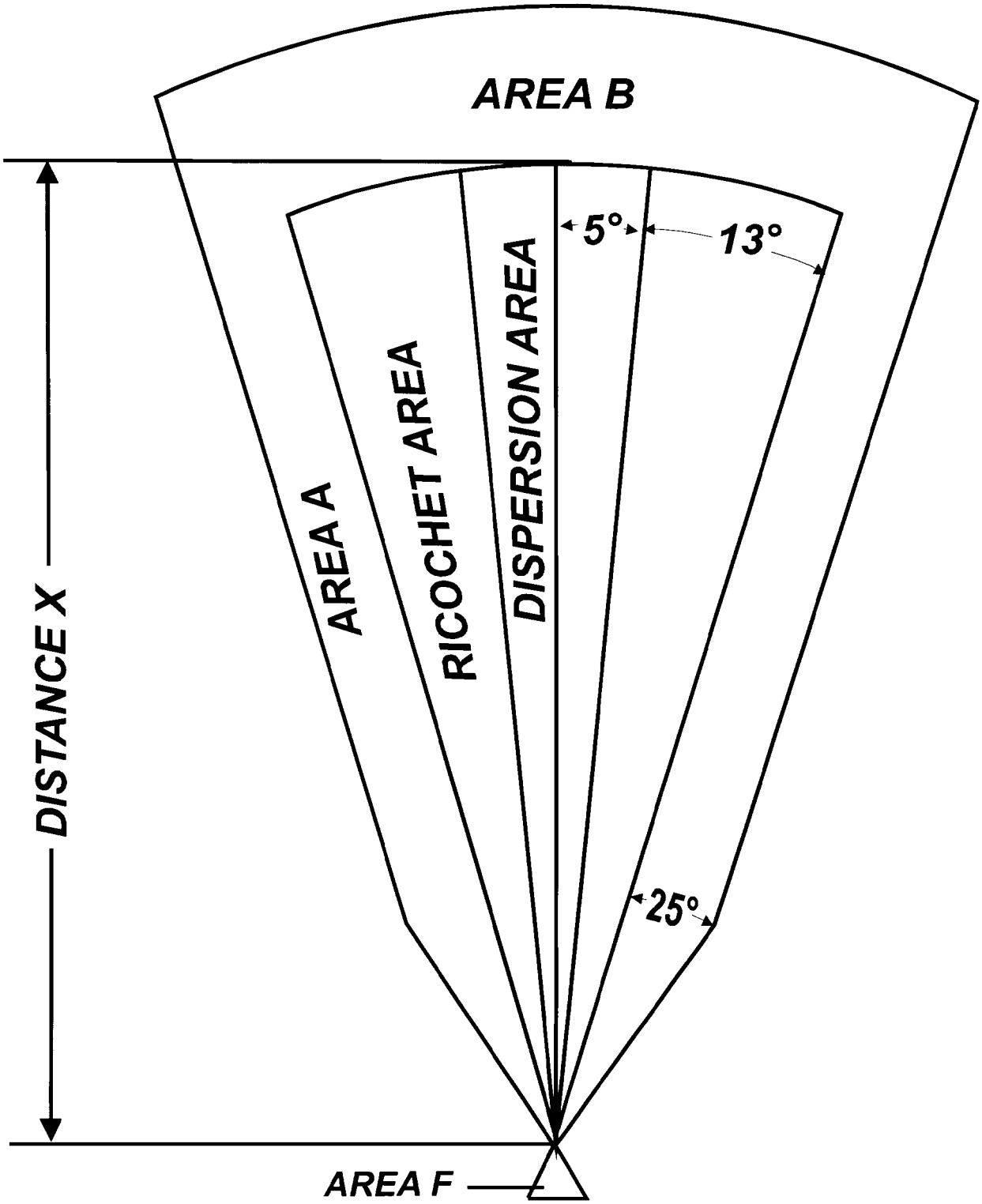

Figure 8–4. SDZ for firing AT–4

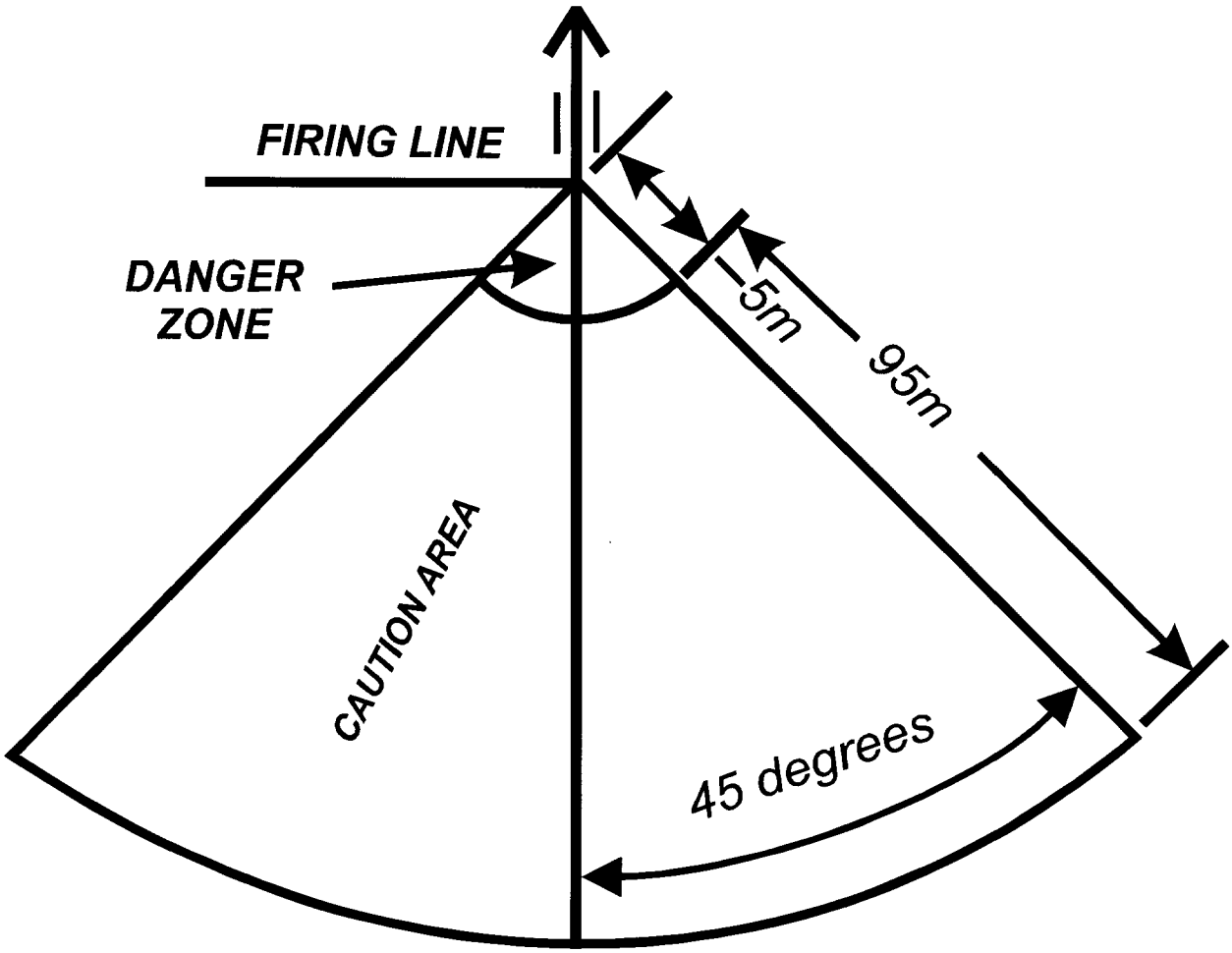

Figure 8–5. SDZ, area *F* for firing AT–4

Chapter 9
Recoilless Weapons

9–1. Firing conditions

a. Ammunition loading and unloading will be accomplished on the firing line with the muzzle of the weapon pointed downrange. Procedures and precautions in appropriate FMs and TMs will be observed in all preparation and firing operations.

b. Personnel will not stand or have any portion of the body directly in front of or behind a loaded weapon.

c. The firing of HE or HEAT at manned target vehicles is prohibited. Moving target vehicles will be operated by remote control. Operating personnel will be located outside the SDZ.

d. Personnel within 700 m of the firing point will wear approved single hearing protection when firing recoilless rifles. Eye protection will be worn.

e. Recoilless rifles will not be within 50 meters of a vertical or nearly vertical backstop, barrier or obstacle due to the risk of debris ricochets.

9–2. Surface danger zone

a. SDZ requirements for recoilless rifles are in table 9–1 and figures 9–1, and 9–2.

Table 9–1
Recoilless rifles surface danger zone criteria (in meters)

Caliber	Distance *X*	[1]Minimum range to impact	Area *A*	Area *B*	[2]15°	[3]Area *F*	
						Depth	Base
90 mm	2,200	300	300	350	1,500	45	50
106 mm	6,900	300	300	350	4,800	45	50

Notes:
[1] Minimum range to impact may be reduced by 75 percent when firing nonexplosive projectiles from unprotected positions or live projectiles from protected positions.
[2] See table 9–2. See figure 9–3 for SDZ construction method.
[3] Area *F* has a depth of 45 m and a width of 50 m (25 m each side of the rearward extension of the GTL).

Table 9–2
Distances required for firing antipersonnel cartridges at quadrant elevations of 15° or less

Caliber	Distance *X*	Distance *D*	Maximum width at distance *X*
90 mm	1,900	1,100	850
106 mm	5,100	1,800	2350

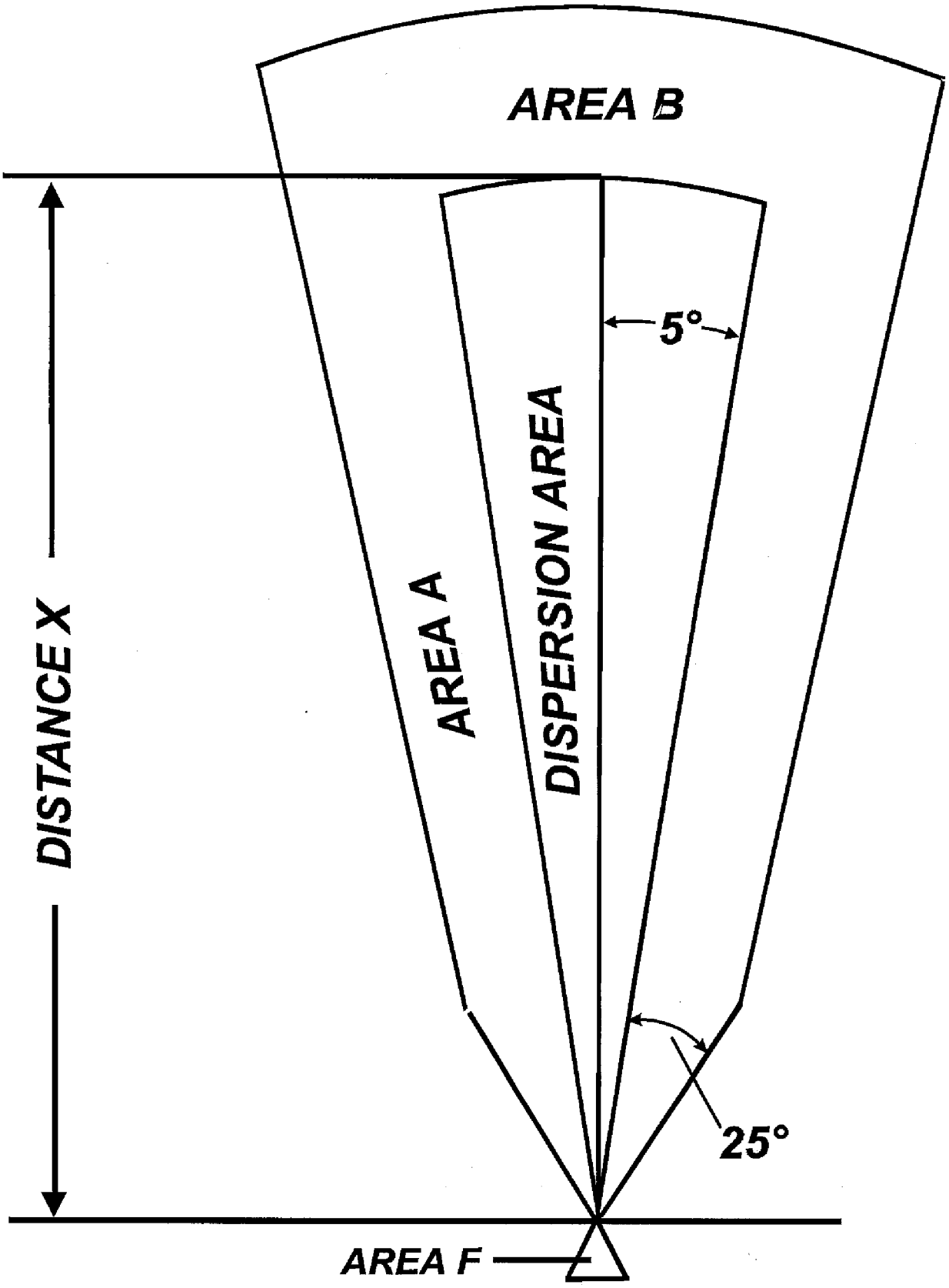

Figure 9–1. SDZ for firing recoilless rifles firing at quadrant elevation of 15° or more

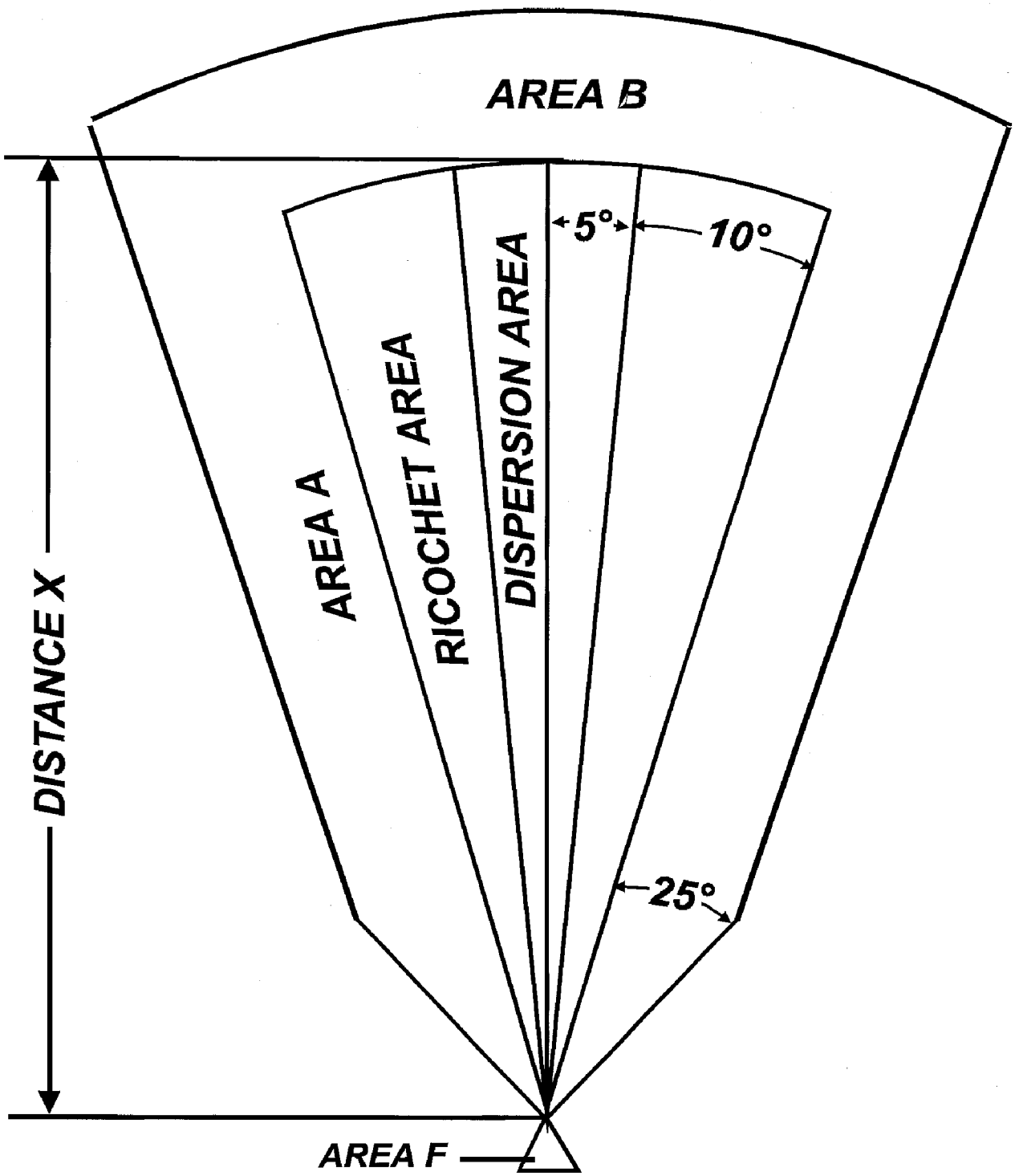

Figure 9–2. SDZ for firing recoilless rifles firing at quadrant elevation less than 15°

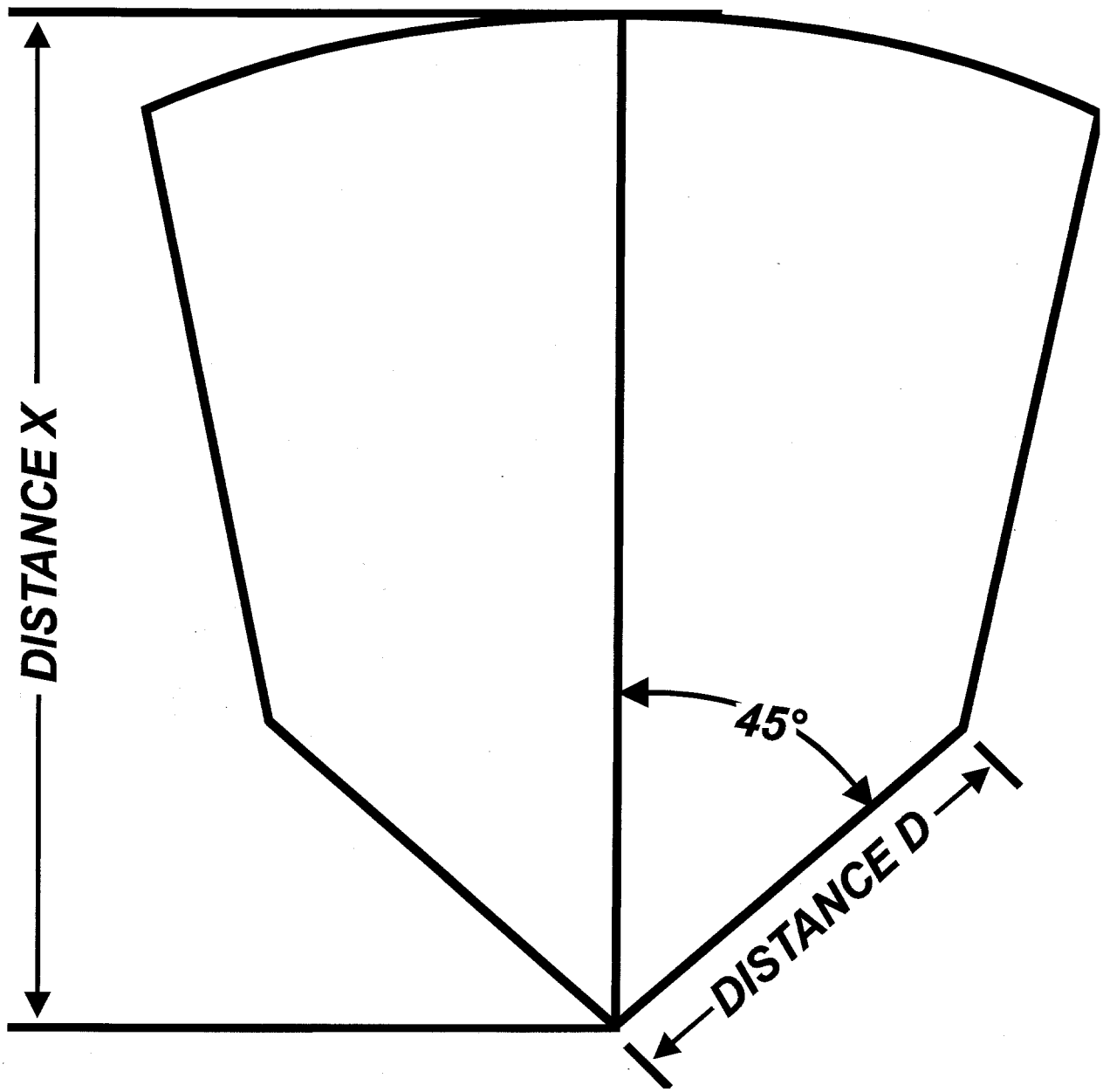

Figure 9–3. Surface danger zone for firing recoilless rifles firing antipersonnel cartridges at quadrant elevations of 15° or less

b. Before firing, the SDZ to the rear of the weapon (area *F*) will be cleared of personnel, materiel (including expended cartridge cases), and readily combustible vegetation. Area *F* is an isosceles triangle with apex at the breech and the width of the triangle corresponding with a rearward extension of the GTL.

Chapter 10
Mortars

10–1. Firing conditions

a. Firing mortars over the heads of unprotected troops by Marine Corps units is not authorized. Firing mortars over the heads of unprotected troops by Army units is not recommended. Mortar ammunition must be certified for overhead fire of unprotected troops. The installation commander may approve firing over the heads of unprotected troops with certified overhead fire mortar ammunition, on the basis of acceptable level of risk. Procedural controls to prevent human error (for example, dedicated observer-controllers with the unprotected troops and firing mortars with dedicated communications) will be included in the risk management process.

b. Overhead fire is allowed when soldiers are in tanks with hatches closed 100 meters or more from the line of fire.

c. Point detonating fuze series M52 (not modified), M82, and M519 will be used for combat emergency firing only.

d. All personnel who take part in mortar firing will wear approved protective helmets; for Marine Corps only, personnel will wear flak jackets. At the commander's discretion, the gunner may remove his/her protective helmet while sighting the mortar. All personnel within the hearing hazard zone for the mortar, cartridge, or charge increment used will wear approved single hearing protection. The hearing hazard zone is usually defined in the manuals for the mortar or cartridges. If the hearing hazard zone information cannot be determined, hearing protection will be required within 200 m.

e. Propellant increments removed from rounds before firing will be placed in metal or wooden covered containers located outside the firing vehicle or positioned a distance of at least 25 m from the firing point when firing dismounted.

f. Cartridge M720, M721, M722, and M888 will not be fired above propellant charge 2 in the M2/M19 mortar.

g. Cartridge M720 will not be fired in the hand-held mode with a charge greater than 1.

h. No 800 series cartridges may be fired in the M29 mortar except the M880 short-range target practice round. This also applies when using the M303 insert.

i. The 4.2-in mortar will not be fired at elevations greater than 60 degrees.

j. When firing the 120-mm mortar from the carrier, all crewmembers and personnel inside the carrier must wear double hearing protection. Double hearing protection is required regardless of the carrier ramp position (opened or closed). Double hearing protection is defined as any approved earplugs plus either a combat vehicle crewman helmet, or a communication aural protective system/artillery communication aural protective system with personnel armored system for ground troops helmet. Personnel outside the carrier within 200 m must wear single hearing protection.

k. Firing restrictions and limitations in TM 43–0001–28 apply to all cartridges and fuzes. Marine Corps will observe restrictions in TM 08655A–10A for light armored vehicle-mortar variants.

l. The target engagement distance will not be less than the distance required for area *B* of the respective caliber of mortar to be fired from protected positions.

m. Unused powder increments must be safeguarded and handled according to installation range and environmental regulations.

10–2. Surface danger zones

a. SDZ requirements for the 60-mm, 81-mm, 4.2-in, and 120-mm mortars are provided in table 10–1 and figure 10–1.

Table 10–1
Mortar surface danger zone criteria, in meters[1, 2, 3]

Caliber	Area *A*	Area *B*
60 mm	250	300
81 mm	400	400
4.2 in	400	500
120 mm	600	600

Notes:

[1] Quadrant elevation limits must be modified to take into account the distance to the minimum and maximum limits of the impact area. After registration, corrections must be applied to the deflection quadrant elevation limits. When firing the 4.2-in mortar, if registration firing is not conducted, metro and velocity error corrections will be applied to these limits, or all targets will continue to be selected in the central portion of the impact area.

[2] Dimensions of areas *A* and *B* may be reduced by 50 percent when firing illumination cartridges.

[3] Cartridges without HE filler (for example M880, M931) do not require areas *A* and *B*.

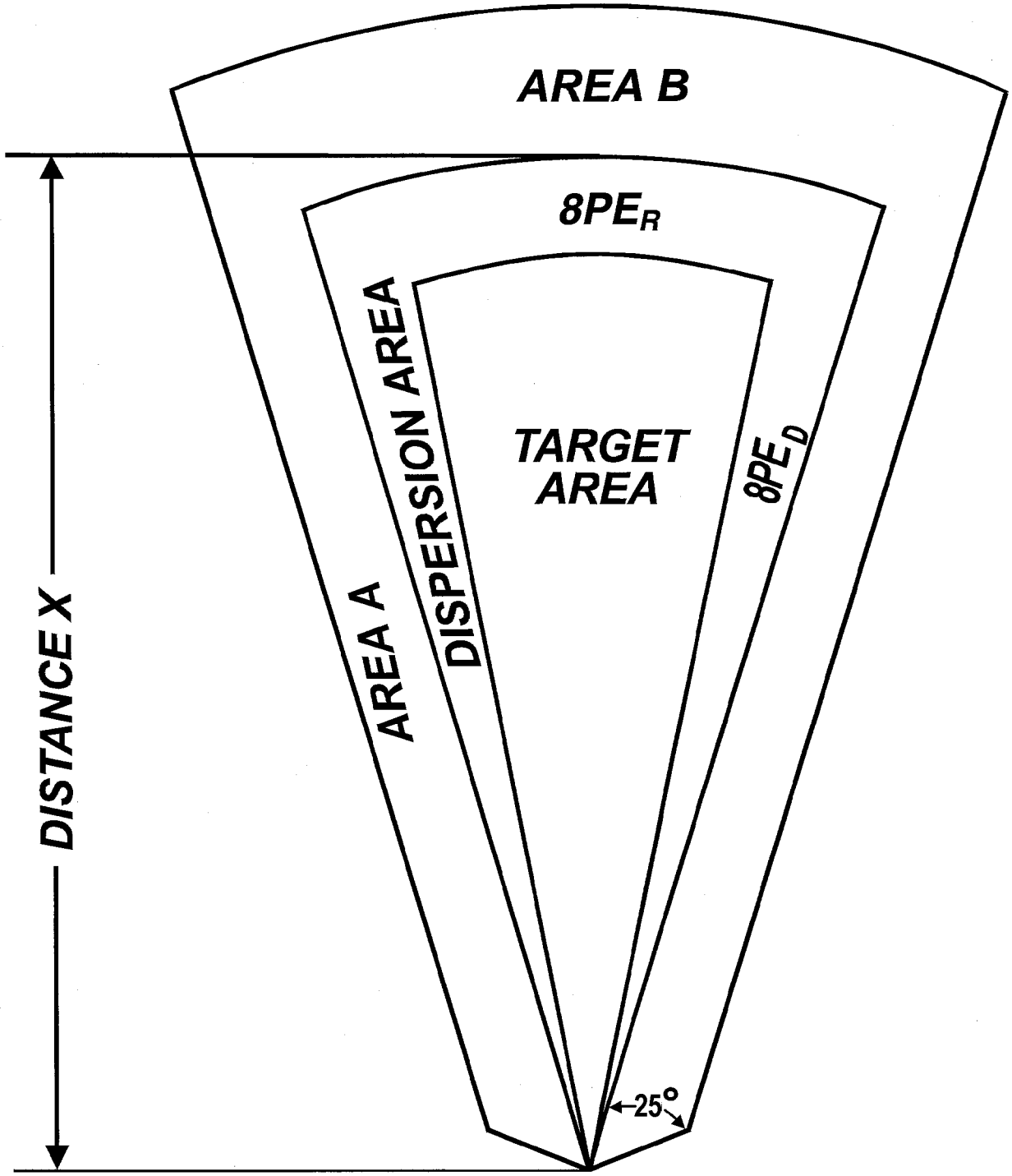

Note: The 25 degree angle must be increased to 70 degrees when firing HE ammunition at ranges equal to or less than 600 m for 60-mm mortars; 940 m for 81-mm mortars; 940 m for 4.2-in mortars; and 1,415 m for 120-mm mortars.

Figure 10–1. SDZ for firing mortars

b. Distance *X* will not be less than the maximum range of the greatest charge to be fired.

c. Basic dimensions of the impact area will be computed as specified in table 10–2.

Table 10–2
Basic impact area dimensions

Limits	Dimensions
Left	Eight deflection probable errors (PE_D) from the left limit of target area.
Right	Eight PE_D from the right limit of target area.
Far edge	Eight range probable errors (PE_R) from the far edge of target area.

d. Firing table probable errors corresponding to the maximum range of charge employed will be used for this computation. These basic dimensions are based on standard conditions. They do not compensate for errors or nonstandard conditions.

e. To compute the probable errors in range and deflection, multiply the constant (listed in the SDZ diagram) by the data found in the tabular firing tables. These data are drawn in meters from the downrange edge of the target area for PE_D and PE_R.

f. When firing ammunition with explosive warheads at distances equal to or less than the lateral hazard area (area *A*), the angle between the weapon target line/lateral limits and the firing point will increase by the width of area *A*.

Chapter 11
Field Artillery

11–1. Procedures and precautions

This chapter contains procedures and precautions required to fire cannon and rocket field artillery.

11–2. Safety certification program

a. Commanders of field artillery units, battalion and above, will establish and maintain an artillery safety training and annual certification program in accordance with Chapter 1.

b. Field artillery commanders will determine, select, train, and safety certify personnel necessary to assist them in discharging this responsibility. These personnel will include, but are not limited to, the firing battery commander, executive officer or platoon leader, fire direction officer, chief of firing battery or platoon sergeant, gunnery sergeant, chief fire direction center computer, and howitzer or launcher chief of the section. These positions will be filled by command safety certified individuals. Their duties will be as described in the appropriate FMs.

c. A separate battery safety officer is not required during the firing of field artillery, but commanders may appoint one.

11–3. Field artillery cannons

a. Firing conditions.

(1) Procedures will be established for weapon systems producing blast overpressure hazards to reduce the risk to artillery crews from auditory and internal injury caused by blast overpressure from specific charges. Individuals who experience shortness of breath, chest discomfort, bleeding from mouth, nose or ears, or excessive shakiness (tremors) when exposed to weapon system firings may be suffering from a blast overpressure injury. Individuals with any of these symptoms will be instructed to lie down and remain quiet and immobile. Injured personnel will be transported to the nearest medical facility for immediate evaluation and treatment. Firing procedures for specific weapon systems can be found in appropriate TMs.

(2) Lanyards will not be attached to the firing mechanism of field artillery cannons that use separate loading ammunition until the designated crewman has announced “READY.” Unused powder increments must be safeguarded and handled in accordance with appropriate TMs and installation range regulations.

b. Fuzes.

(1) Alteration of fuzes is prohibited unless specifically authorized by the Commanding General, AMC, and supervised by a qualified AMC commissioned officer, warrant officer, or civilian. For the Marine Corps alteration of fuzes is prohibited unless authorized by COMMARFORSYSCOM.

(2) Protect points of fuzes from blows or damage when handling ammunition, because the closing cap may be sufficiently deformed and may activate the percussion primer in the fuze. Personnel inserting rounds of ammunition

into cannons will be cautioned to keep each projectile away from the path of cannon recoil until recoil from the previous projectile is complete.

(3) Screw the fuze down by hand and firmly seat with the correct fuze wrench.

(4) Projectiles removed from cannons with ramming staffs will not be reused.

(5) All projectiles fired during training will be fuzed with bore safe fuzes.

(6) Fuzed projectiles fired during training exercises will be the type that precludes close-in premature bursts that would present a fragment and debris hazard to the firing crew. Other type fuzes require all personnel within area *A* distance from the firing position to be provided positive protection against premature bursts. When only white phosphorous (WP) ammunition is involved, this distance may be reduced to 200 m for positive protection from premature bursts. Positive protection at the weapon system position will meet the minimum requirements of four thicknesses of sandbags filled with dry, sifted sand stacked high enough for protection against all calibers of ammunition, or trenches deep enough to provide complete protection, or concrete walls 0.30 m thick, or tanks with hatches closed.

(7) Firing projectiles without fuzes is prohibited.

c. Malfunctions.

(1) Malfunctions that occur during firing of ammunition will be investigated in accordance with AR 75–1 or MCO 8025.1_.

(2) Procedures to be followed when a misfire or hang-fire occurs, or when the potential for a cookoff exists, are in the appropriate weapon system TMs.

d. Loading or firing ammunition. Do not load or fire ammunition at bore temperatures higher or lower than the safe limit of firing. After loading, fire the weapon system, or in case of a cease-fire, immediately remove the projectile. If the projectile cannot be removed from the weapon system within 5 minutes, evacuate all personnel to a distance equivalent to area *A* for the munitions. See TM 43–0001–28 and appropriate weapon system TMs.

e. Authorized propellant charge. Use only authorized propellant charges for the specific projectile and weapon system to be fired. Never use more charges than those comprising the full authorized charge.

f. WP-impregnated felt wedges from the M825 and M825A1 projectiles. These may not be totally consumed when the WP burns. Crushing or moving unburned felt wedges would reignite residual WP, posing a burn hazard. Personnel will not disturb unburned felt wedges.

g. Rocket assisted projectiles (RAP). These will not be fired over the heads of unprotected troops during training exercises. Rocket-on firings require a clear zone short of the target area in case the rocket motor fails to function. Rocket-off firings also require a clear zone beyond the target area to allow for accidental (unintended) initiation of the rocket motor. 105-mm RAP require a clear zone of 4,000 m short of and beyond the target. 155-mm RAP require a 6,000 m clear zone short of the target, because the projectile may be fired in the rocket-on mode only.

h. Salute (blank) firing of 75 mm and 105 mm. These produce hazards from muzzle debris and noise. Muzzle closure debris can be expelled 92 m forward of the weapon and 10° either side of the bore axis. Hazardous noise levels (140 decibels) are 77 m along the bore axis, 49 m at 30° each side of the bore axis, 31 m at 60° each side of the bore axis, 21 m at 90° each side of the bore axis, 14 m at 120° each side of the bore axis, 10 m at 15° each side of the bore axis, and 10 m directly behind the weapon.

i. Hearing protection. All personnel within the hearing hazard zone will wear approved single hearing protection. The hearing hazard zone is usually defined in the manuals for the cannon, propellant charges, or cartridge. If the hearing hazard zone information cannot be determined, hearing protection will be required within 800 meters.

11–4. Field artillery cannon SDZs

a. SDZ requirements for all field artillery cannons firing conventional ammunition (excluding antipersonnel (APERS)/"beehive" and cannon launched guided projectiles (Copperhead)) are provided in table 11–1 and figures 11–1 through 11–3. Computer generated SDZs (for example, ASDZs) are authorized if the software has been thoroughly tested and validated by survey and manual computations, approved for use by the artillery commander who trains the unit, and reviewed and verified by the installation RCO. Tactical fire control measures may be substituted for SDZs provided they correspond to figure 11–1 or 11–2 as applicable.

Table 11–1
Basic impact area dimensions

Limits	Dimensions
Left	Eight deflection probable errors (PE_D) from the left limit of target area.
Right	Eight PE_D from the right limit of target area.
Far edge	Eight range probable errors (PE_R) from the far edge of target area.
Near edge	Twelve PE_R from the near edge target area.

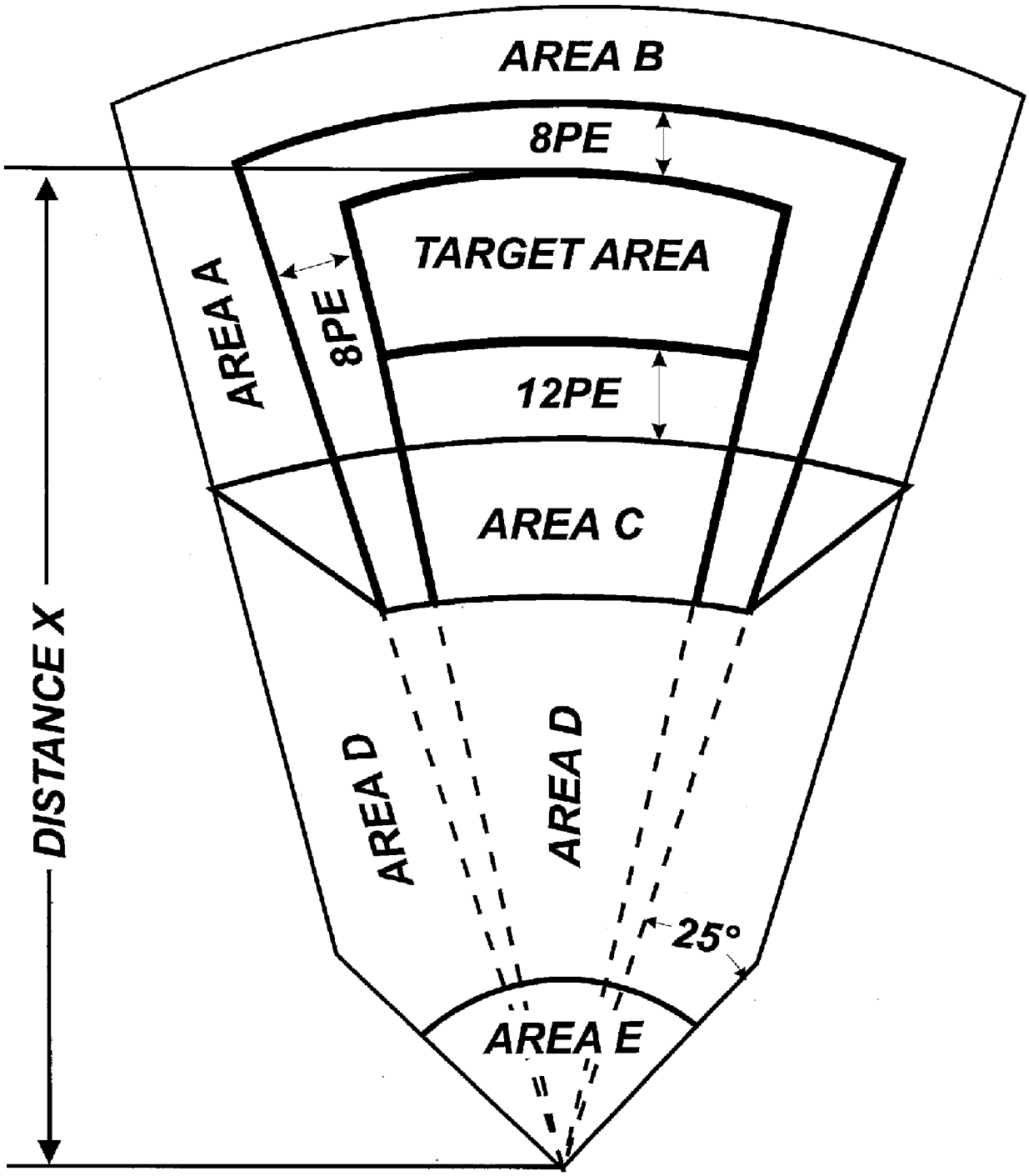

Figure 11–1. SDZ for firing field artillery cannon in the indirect mode at fixed ground targets

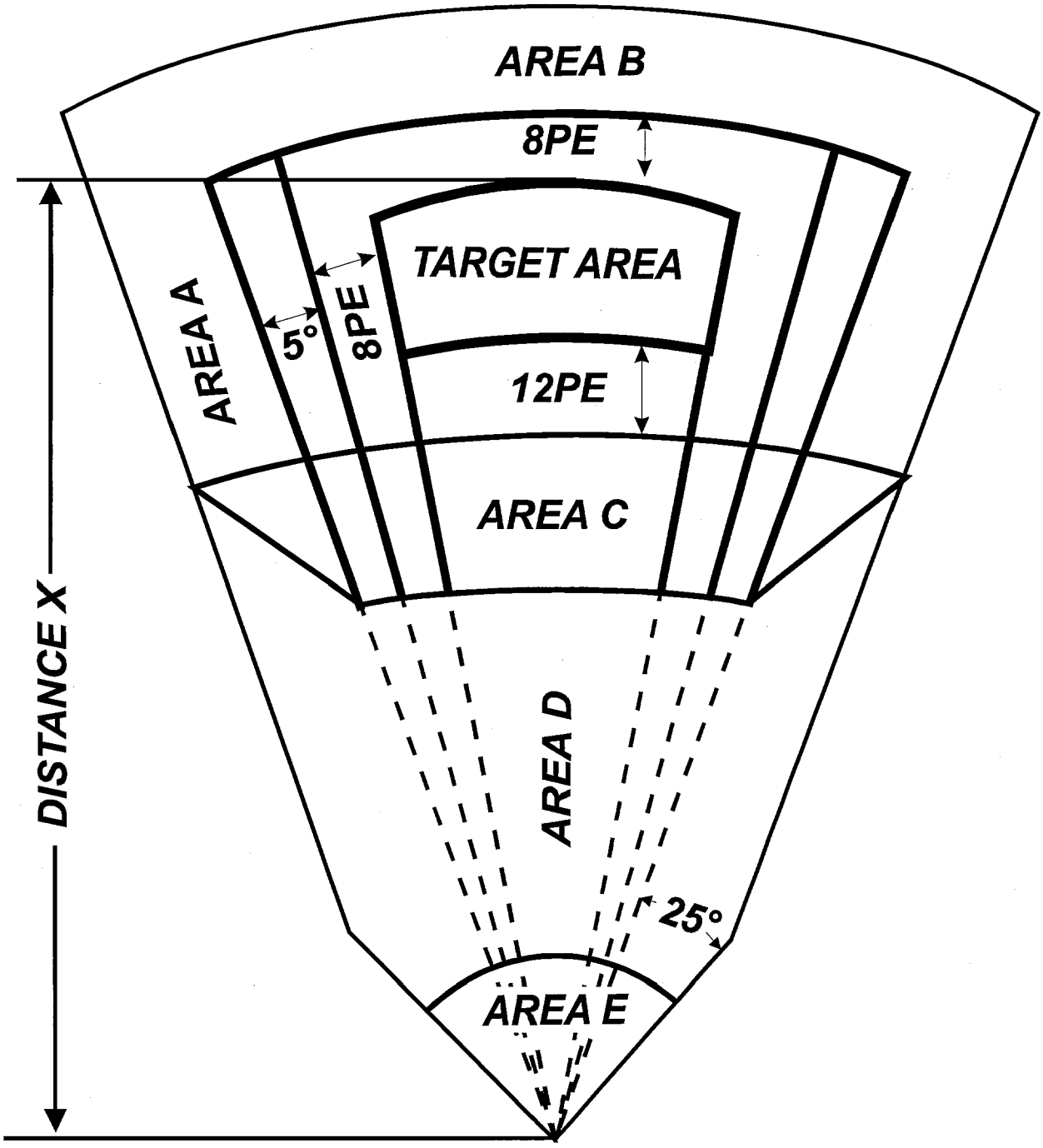

Figure 11–2. SDZ for firing field artillery cannon in the indirect mode at moving ground targets

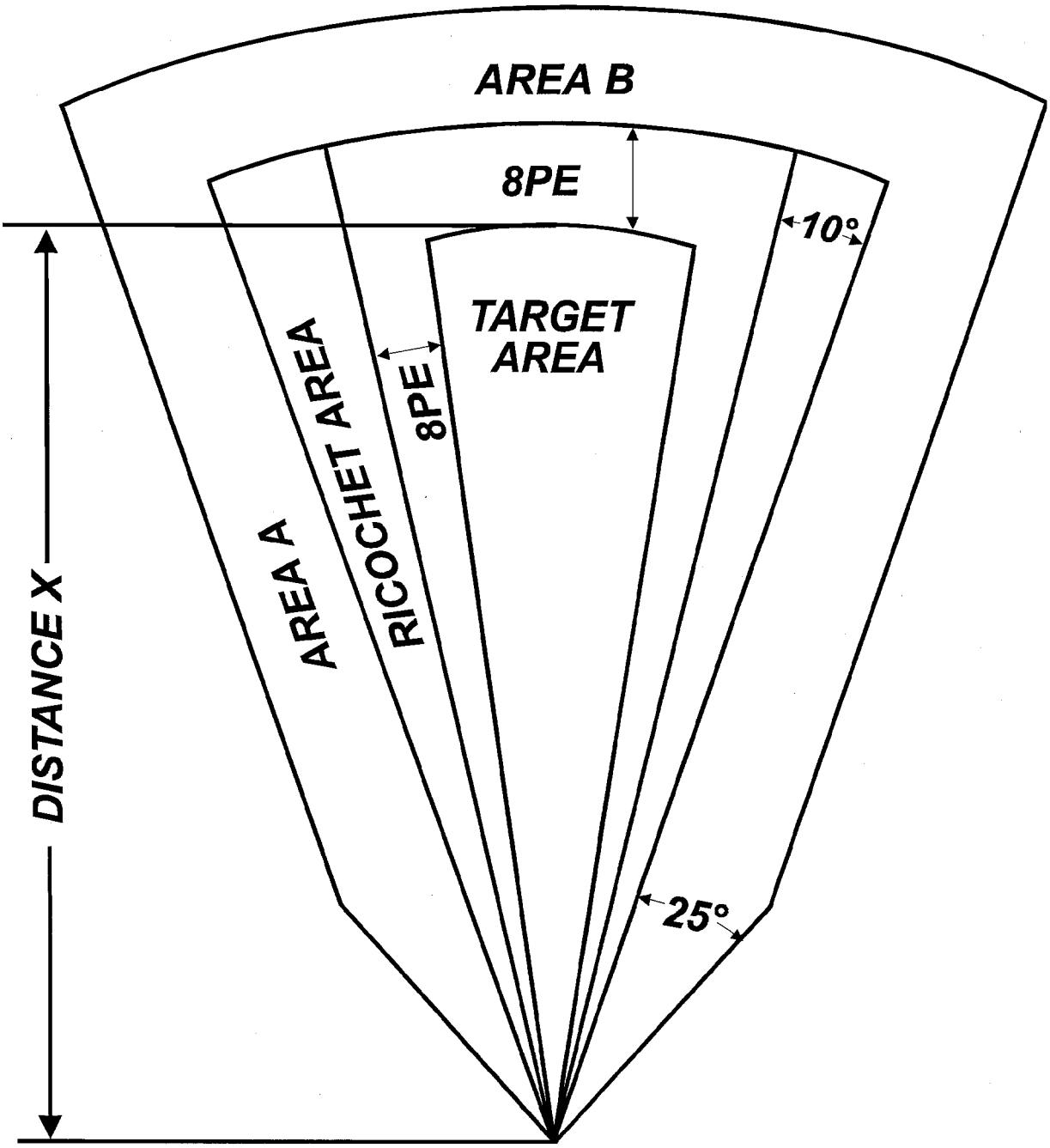

Figure 11–3. SDZ for firing field artillery cannon in the direct mode at fixed ground targets

b. Installation RCOs will determine target area boundaries. Left and right limits of the target area determine the left and right limits of fire. The maximum range line (arc) will be the far edge (down range) of the target area, and the minimum range line (arc) will be the near edge (up range) of the target area. When firing at moving targets with indirect fire, an additional 5° angle will be added to each side of the SDZ between the probable errors in range and the inner limits of area *A*. Unprotected personnel are prohibited in the target and associated hazard areas (areas *A*, *B*, *C*, and *E*) during firing.

c. The size of the impact area depends upon the requirements of the firing exercises planned and the overall target area as defined by the installation range control officer.

d. Basic dimensions of the impact area will be computed as specified in table 11–2.

Table 11–2
Field artillery cannon SDZ criteria, in meters

Caliber	[1]Area *A*	[1,2]Area *B*	[3]Area *C* low angle	[3]Area *C* high angle time, VT	Area *E*	[4]Direct fire mode
105-mm Howitzer	550	550	300	350	550	650
155-mm Howitzer	725[5]	725[5]	350	550	725	750

Notes:
[1] Dimensions of areas *A* and *B* may be reduced by 50 percent when firing illumination projectiles.
[2] Firing will be conducted only with charges that have a minimum range of at least 1,400 m beyond the far edge of area *C*.
[3] When the headings of more than one column above relate in some way to the type of firing to be conducted, the column giving the larger value of area *C* will be used.
[4] Distances in this column represent minimum target engagement distances when personnel at the firing position are unprotected.
[5] Areas *A* and *B* for M825, 155-mm WP smoke projectiles may be reduced to 350 m.

e. Firing table probable errors corresponding to the range for the center of the target area will be used for this computation. These basic dimensions are based on standard conditions. They do not compensate for errors or nonstandard conditions.

f. Light field artillery fire, up to and including 105-mm howitzer, may impact no closer than 100 m to occupied bunkers. Medium and heavy field artillery fire, above 105 mm, may impact no closer than 200 m of occupied bunkers. Ammunition certified for overhead fire must be used. Bunkers must have been constructed and approved to protect personnel from a direct hit by the ammunition being fired. Constant communication must be maintained between the firing position and bunkers. Observation from bunkers will be by indirect viewing such as periscopes unless an approved design for direct viewing has been provided.

g. Bunkers to be used in accordance with paragraph 11–4*f* will be designed and constructed using specifications provided by the facility engineer. The installation/community safety director will review designs before final approval to ensure that structural integrity is maintained against direct hits and penetrating fragments. Direct viewing methods will be designed and constructed according to specifications provided by the facility engineer.

h. Area *A* is the lateral danger area of the SDZ. Size will vary according to caliber of weapon system and ammunition fired. Personnel occupation of area *A* is prohibited except when bunkers are constructed in accordance with paragraph 11–4*f*.

i. Area *B* is the downrange danger area of the SDZ beyond the impact area. The size of area *B* will vary according to the caliber of weapon system and ammunition fired. Personnel access to area *B* is prohibited except when in bunkers constructed in accordance with paragraph 11–4*f*.

j. Area *C* is the danger area adjacent to the near edge of the impact area. The size of area *C* will vary according to the caliber of weapon system and ammunition fired. Personnel access is prohibited unless protective cover designed for positive protection against a direct hit is used. Tanks and armored personnel carriers with hatches closed are permitted in area *C* when field artillery ammunition is fired overhead with variable time (VT) or time (T) fuzes. Height of burst data in table 11–3 will be used to provide an adequate degree of safety to protect personnel and materiel from ammunition fired with VT or T fuzes. The following procedures apply when firing over tanks and armored vehicles:

Table 11–3
Heights of burst above occupied armor vehicles, in meters

Vehicle	Distance above vehicle	
	105 mm	155 mm
Armored vehicles[1]	125	150
M60 Tank	40	55
M1/M1A1 Tank	40	55

Notes:
[1] Includes series M113, M125, M106, M728, M577, M551, M2 and M3.

(1) Do not use weapon systems of calibers greater than 155 mm.

(2) Use sufficient quadrant elevation so that if the time element of the fuze fails to function, the projectile will land beyond the tank or armored vehicle at a distance equal to the predicted height of burst plus four PE_R.

(3) Only certified ammunition (projectiles, propellant and fuzes) will be fired over the heads of unprotected soldiers.

k. Area *D* is the danger area located between danger areas *C* and *E*. The size of area *D* varies according to the required dimensions of the impact area (target area and probable errors), and areas *A*, *C*, and *E*. Area *D* is the "safe zone" within the SDZ where minimal hazards exist, provided certified ammunition for overhead fire is used. Unprotected soldiers may occupy area *D* for training. Installation commanders may authorize nonparticipating personnel access to area *D* during indirect field artillery firing. When public highways pass through area *D*, coordination with appropriate government officials (federal, state, and/or local) and/or land owner(s) is required. When public roadways and railways pass through area *D*, the following precautions apply:

(1) Projectile trajectories must clear unprotected personnel or objects by at least 5 m plus two forks. If the minimum range line (arc) is greater than the distance to the near edge of the target area, use the computed minimum range line (arc) for the near edge of the target area.

(2) Unless personnel are provided cover designed to withstand a direct hit, the minimum arming time of the proximity (VT) fuze establishes the near edge of the impact area. The minimum arming time of the proximity (VT) fuze will be the time set on the fuze corresponding to the range to the near limit of the impact area or computed minimum range line, whichever is greater, plus 5.5 seconds.

(3) Forward movement of personnel within area *D* requires that the SDZ advance according to the distance and direction of the personnel. If proximity or VT fuzes with adjustable arming times are used, forward movement of personnel is possible. VT fuze time settings will correspond to the range to the near limit of the impact area plus 5.5 seconds.

(4) Public roadways approved for overhead fire that pass through an installation or community will be posted to warn the public that field artillery projectiles may be fired at any time of the day.

l. Area *E* is the danger area located immediately in front of the firing position. The size of area *E* varies according to the caliber of weapon system and ammunition fired. Variable hazards are blast overpressure, noise, ground and muzzle debris, or other potential injury related to the weapon system firing, such as premature detonation of projectiles. Weapon system crews firing from approved tactical configurations are authorized access to area *E*. Operational and range control personnel involved in firing exercises with a valid need to enter area *E* may do so with the approval of the installation range control officer. Based on risk assessment of firing conditions, the installation/community range manager may reduce area *E* to not fewer than 300 m for 105-mm weapons and 350 m for 155-mm weapons on a case-by-case basis.

m. Distance *X* is the maximum range of a weapon system at a given quadrant elevation and charge. When firing in the direct mode, distance *X* will not be less than the range of the weapon system corresponding to a quadrant elevation of 15 degrees for a given charge.

11–5. Antipersonnel ammunition (beehive)

a. Firing conditions.

(1) APERS ammunition is available for 105-mm cannon artillery and 105-mm tank cannon. It is designed for use against personnel in direct fire, muzzle action, or direct fire missions with a time setting.

(2) APERS ammunition will not be fired over the heads of unprotected personnel. Hardware discarded by functioning of "beehive" projectiles presents a potential hazard to personnel to the side and rear of the weapon.

b. SDZ.

(1) SDZ requirements for "beehive" ammunition is given in table 11–4 and figure 11–4.

Table 11–4
Beehive SDZ criteria, in meters

Caliber	Distance *X*[1]	Distance *D*
90-mm gun M377	2,400	2,400
90-mm gun M580	10,600	1,200
105-mm Howitzer[2] M102, M119, M546	7,900	1,100
105-mm gun M664	4,400	300

Notes:
[1] Dimensions for distance *X* are based on 15° quadrant elevation.
[2] Add SDZ information in figure 11–4 to downrange end of normal SDZ, depending on fuze setting.

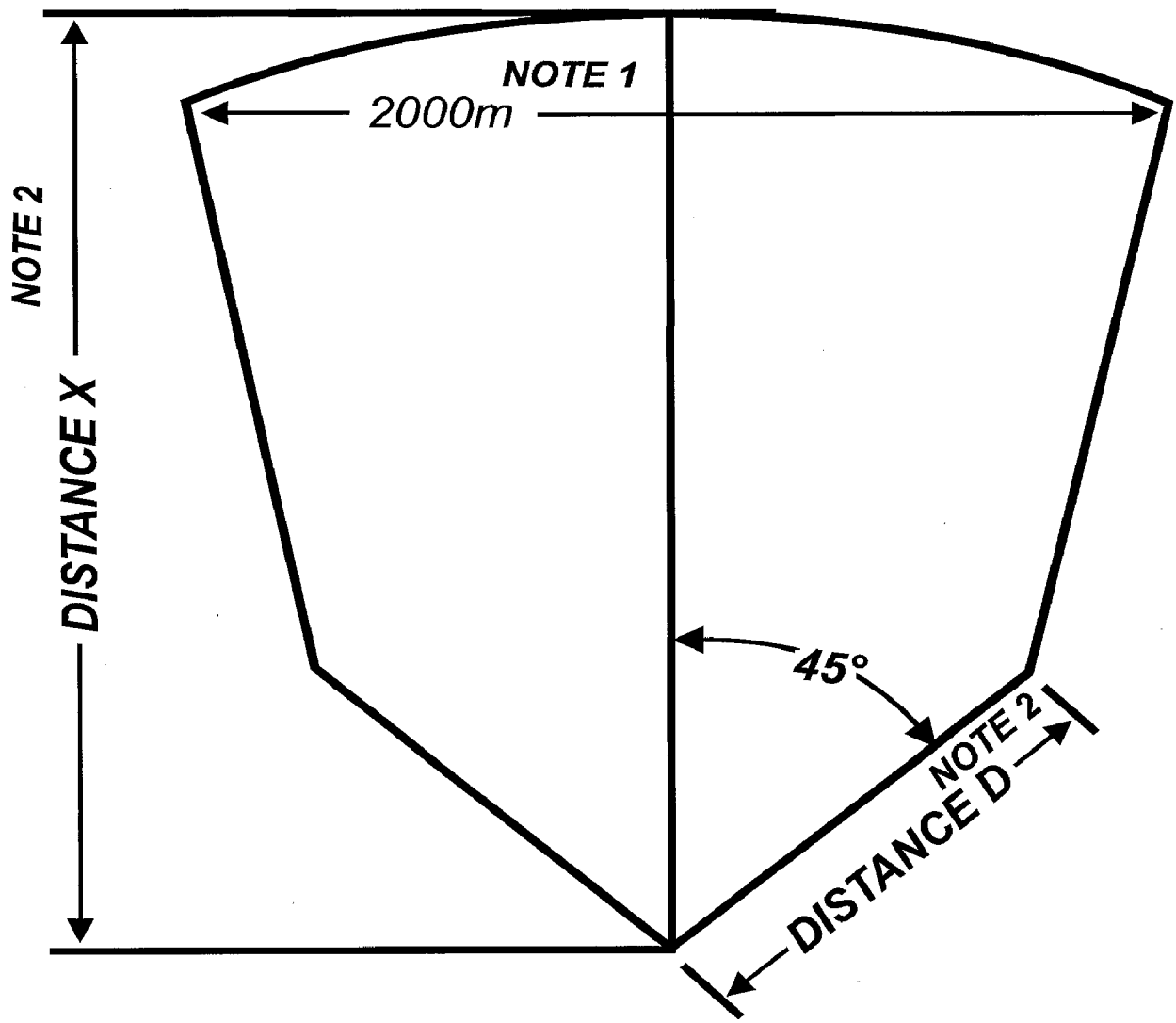

WARNING: Hardware discarded by the functioning of the projectile presents a potential hazard to unprotected personnel located to the side and rear of the weapon.

1. Distance is 2,000 m or 1.41D, whichever is greater.
2. For Distance *X* and Distance *D,* see table 11–4.

Figure 11–4. SDZ for firing field artillery cannon with beehive ammunition in the direct mode at fixed or moving ground targets

(2) Distance *X* is based on the range at 15 degrees quadrant elevation.

(3) For other than muzzle action functioning, begin APERS SDZ construction down range at distance equal to time of fuze setting.

11–6. Cannon launched guided projectile (Copperhead)

a. Firing conditions.

(1) Fire support team (FIST) personnel located in the mission essential area (MEA) will wear approved flak jackets and protective helmets.

(2) FIST personnel are not authorized to occupy the SDZ when Copperhead is fired in the ballistic mode.

(3) Laser designators used with Copperhead will be operated in accordance with safety guidelines in MIL–HDBK–828A and chapter 18.

(4) Specific safety procedures and firing computations for Copperhead are found in FM 6–40.

b. SDZ.

(1) Special SDZ construction requirements for M712, Copperhead are given in figures 11–5 and 11–6.

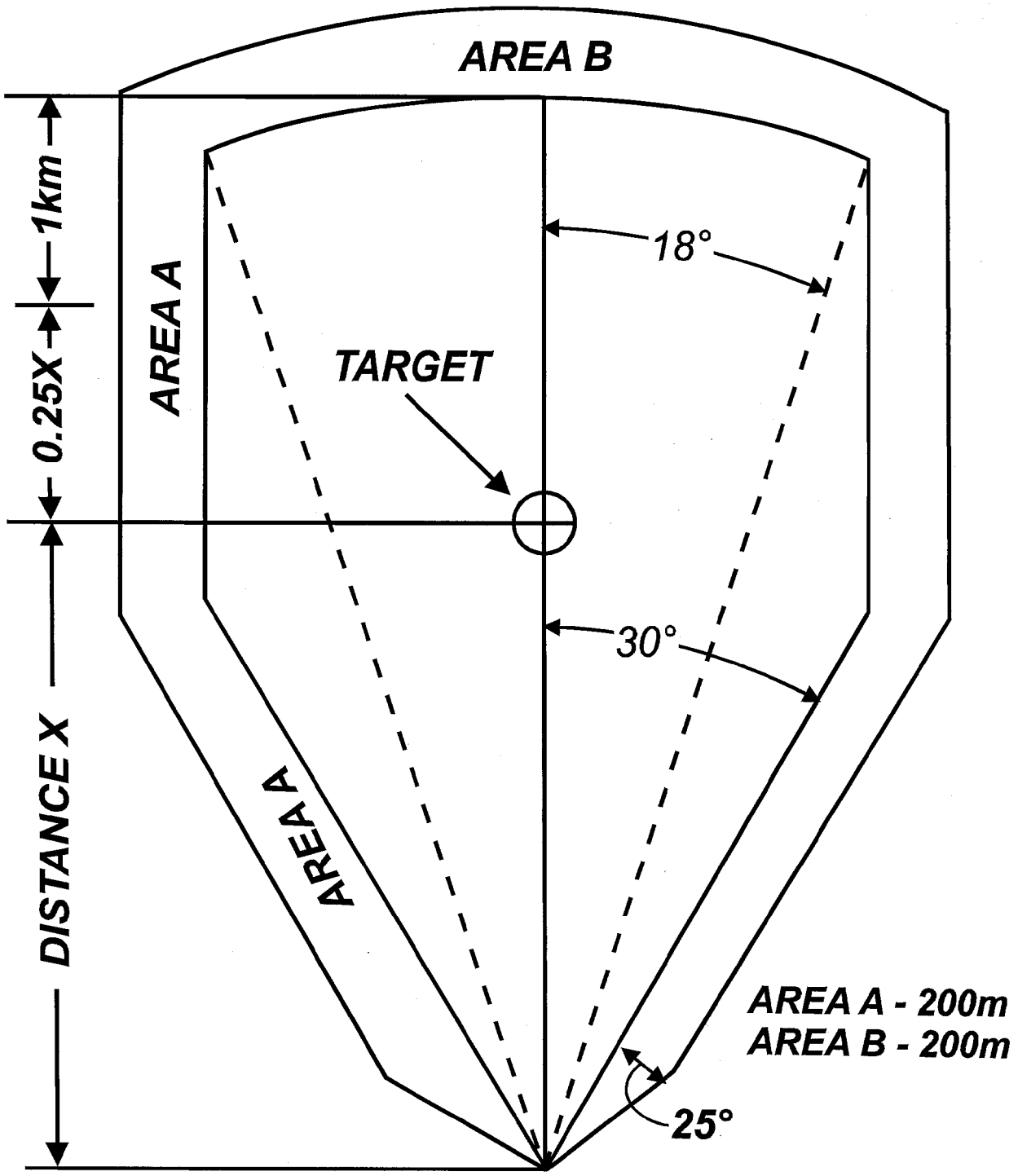

Figure 11–5. SDZ for firing Copperhead in the ballistic mode

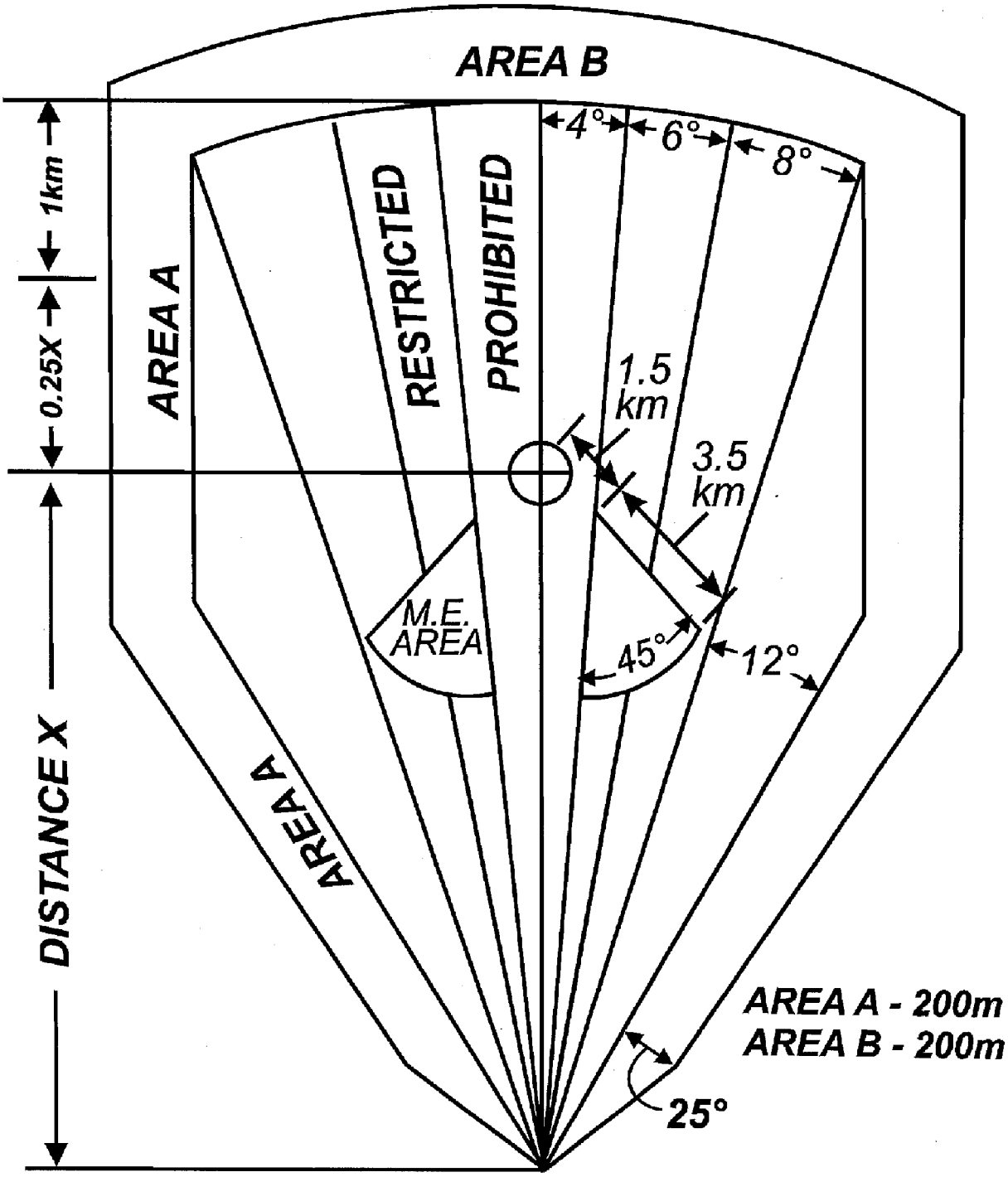

Figure 11–6. SDZ for firing Copperhead in the glide mode

(2) The MEA must start at least 1.5 km in front of the target and not exceed 3.5 km in length (distance equals a total of 5 km from the target). The MEA must remain outside of the prohibited area of the SDZ.

11–7. Flight corridors

Flight corridors are created to vertically and laterally separate aircraft from surface fires. Aircraft may operate within or pass through artillery cannon vertical danger zones, provided—

a. They are established where the maximum altitude of the aircraft will be below the ordinate corresponding to the minimum QE of the ammunition being fired above the flight corridor and corrected for density altitude. Flight corridors may provide access only through area *D.*(See figures 11–7 and 11–8.) Altitudes in flight corridors will be indicated in mean sea level.

Figure 11–7. Flight corridor for field artillery cannon fire over aircraft

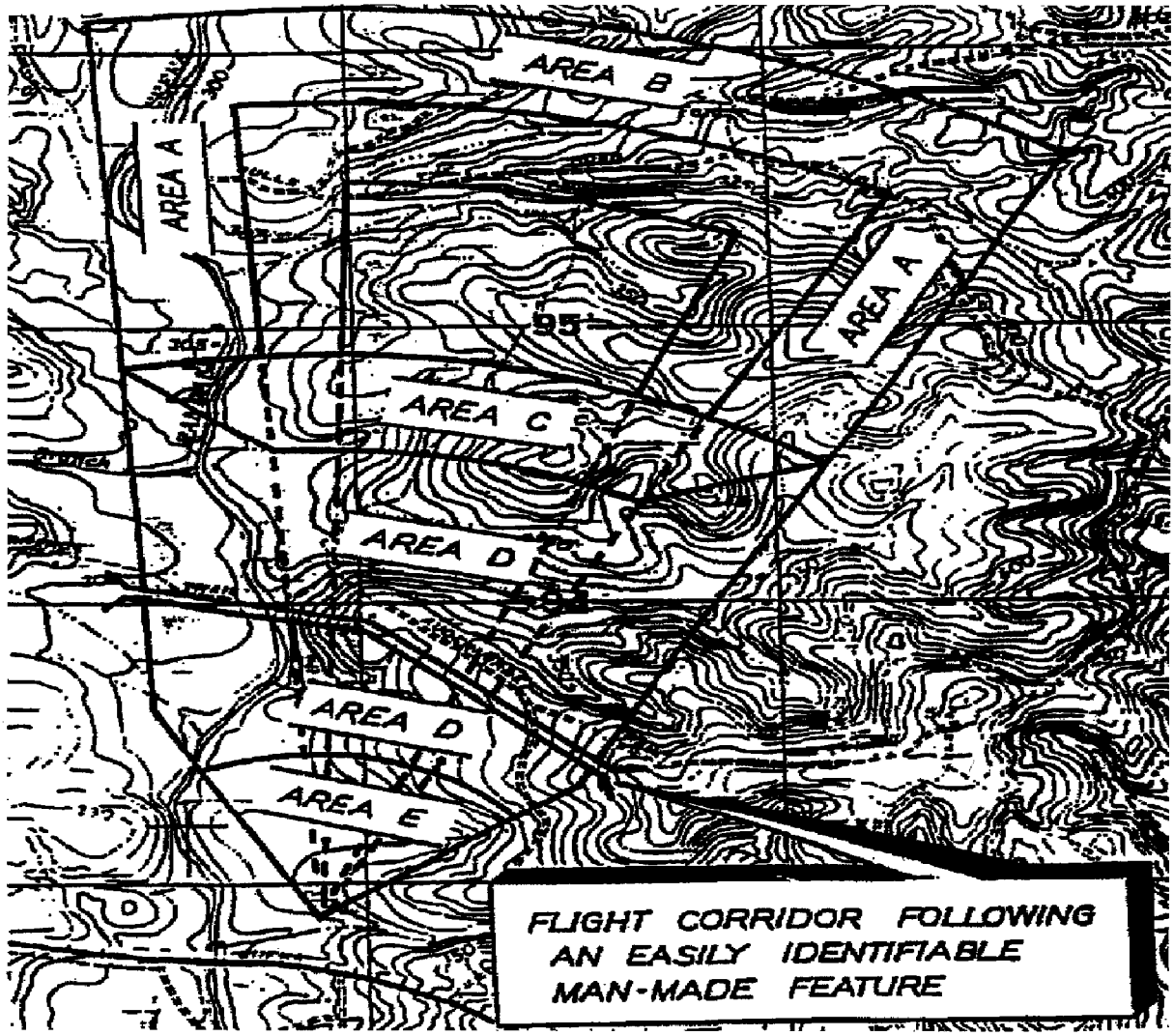

Figure 11–8. An example of an established flight corridor

b. Aircraft permanent flight corridors are established under firing corridors. Corridors will be through area *D* and outside areas *C* and *E*. Altitude restrictions will be in accordance with paragraph 11–7*a*. Corridors will follow easily identifiable markers and routes. Flight control points will be established and aircrews briefed on flight navigation procedures. Maps of flight corridors will be made available at installation range control, facilities base operations, and other locations deemed appropriate by the installation range control officer.

c. Communications are maintained among the designated aircraft, range control, and the firing unit on a common communications network. Aircraft will report entry and exit of specific vertical danger zones. This is not applicable to aircraft operating as part of tactical exercises with firing elements provided communication is maintained between participants. Communications failure with aircraft in a flight corridor requires immediate cease-fire. These procedures will be established by local SOP.

d. Aircraft operating within SDZs as part of an exercise will remain a minimum of 500 m from GTLs and outside of areas *C* and *E*.

e. Only ammunition cleared for overhead fire is used when aircraft are operating in or passing over SDZs.

f. Uncontrolled flights within SDZs are prohibited.

11–8. Improved conventional munitions

a. Firing conditions.

(1) Firing live ICM and dropping aircraft-delivered live submunitions on Army training ranges in training are currently prohibited. Data in this section are advisory for combat (Army only).

(2) Firing of dual-purpose improved conventional munitions (DPICM) is authorized for Marine Corps units in accordance with the MCO P8011.4_ and current Marine Corps Bulletin 8011. Local range SOPs will dictate the specific conditions under which DPICM munitions may be employed in training.

(3) ICM projectiles will not be fired over the heads of troops in training exercises.

(4) When ICM carriers fail to function and impact on hard surfaces, up range and lateral ricochets of up to 500 m may occur.

b. SDZ.

(1) Requirements for field artillery cannon fired ICM are given in figures 11–1 and 11–2. Conventional ballistic tabular firing table data for the particular caliber projectile and weapon system combination will be used to determine maximum range when firing ICM projectiles. (See table 11–5.)

Table 11–5
Maximum range data sources for ICM munitions

Model Number	Reference
M444	Standard 105-mm firing tables for M1
M449	Standard 155-mm firing tables for M107 w/FT–155–ADD–I–2
M483	Firing tables FT 155–AN–2 w/C–1
M509	Firing tables FT 8–T–1 w/C–1

(2) The impact area should be relatively flat and free from heavy vegetation.

(3) Danger areas *A* and *B* will be observed for all firings of ICM projectiles. The data necessary to determine each of these are in table 11–6.

Table 11–6
Secondary danger zones (*A*, *B*, and *C*) for ICM munitions

Cartridge	Areas *A*, *B*, & *C*[1], in meters
M444	440
M449	480
M404	485
M483	650
M509	650[2]

Notes:
[1] Values include a maximum wind submissile drift of 250 meters in a 50-knot wind.
[2] Areas *A* and *B* equal 509 m. Area *C* equals 5650 meters because of possibility of base burner assembly nonignition.

(4) Special design of ICM projectiles subjects them to the effects of wind velocity more than standard conventional projectiles. Submissile drift factors (given in table 11–7) may be added to, or subtracted from the basic trajectory distances presented in respective ballistic tabular firing tables. For example, if the wind is blowing at 50 knots from the gun position toward the target, and the gun is being fired at 600 mil (33.75 degrees), the maximum range from the firing table will be increased by 150 m. If the wind is coming perpendicular (left to right) to the GTL, the right deflection will be increased 160 m and the left deflection will be decreased 160 m.

Table 11–7
Submissile drift factors for ICM munitions

Wind velocity (in knots)	Elevation (in mils)	Maximum range drift	Maximum deflection
		(in meters)	
50	300	250	250
50	600	150	160
50	1150	100	100
10	300	50	50
10	600	40	30
10	1150	20	20

11–9. Field artillery trainer

a. Firing conditions.

(1) The 14.5-mm M31 trainer is authorized for use on permanent installation firing ranges, weapons training facilities, maneuver areas, or where firing range distances are not available for standard weapons firing.

(2) Dud projectiles will occur when firing the trainer, especially when firing on hard soil, asphalt, or concrete. When firing exercises are completed on a temporary impact area, the SDZ will be cleared of all duds and projectile residue before allowing personnel to enter the area. Since dud projectiles for the M183 cartridge will not fragment upon functioning, firing the trainer on temporary impact areas will be restricted to the M183 cartridge. Dud projectiles with time-delay elements (M181 and M182 cartridges) when functioned may cause metal particles to be propelled at velocities up to 60 m per second and will not be fired into temporary impact areas.

(3) The M31 trainer must be cleaned after firing 10 projectiles to prevent premature functioning of projectiles.

(4) Approved single hearing protection will be worn by all personnel within the hearing hazard zone. For the 14.5-mm trainer, the hearing hazard zone extends 14 mil from the muzzle.

b. Malfunctions during M31 trainer firing. These will be handled in accordance with TM 9–6920–361–13&P.

c. Dud retrieval and disposal.

(1) Upon completion of field artillery trainer firing exercises or demonstrations in temporary impact areas, authorized personnel will search the SDZ for dud projectiles. Stakes with flags whose color contrasts with background colors will be used to designate the location of duds.

(2) Personnel detailed to search operations will not touch, handle, or remove duds. EOD personnel will determine the disposition of dud projectiles.

(3) Personnel detailed to mark dud positions will be trained in safe marking procedures and techniques prior to assignment.

d. SDZ.

(1) Field artillery trainer SDZ requirements are given in table 11–8 and figure 11–9.

Table 11–8
Field artillery trainer SDZ criteria, in meters

Impact area condition	Range to target	Maximum ricochet downrange (Area *B*)	Lateral ricochet (Area *A*)
Soft soil[1,2,3]	100	470	75
	150	420	75
	200	375	75
	250	330	75
	300	305	75
	350	290	75
	400	285	75
	450	80	25
	500	80	25
	550	80	25
	600	80	25
	650	80	25
	700	80	25
	730	80	25
Medium soil[2,3,4,5]	100	490	75
	150	455	75
	200	410	75
	250	370	75
	300	355	75
	350	350	75
	400	350	75
	450	80	25
	500	80	25
	550	80	25
	600	80	25
	650	80	25
	700	80	25
	730	80	25

Table 11–8
Field artillery trainer SDZ criteria, in meters—Continued

Impact area condition	Range to target	Maximum ricochet downrange (Area *B*)	Lateral ricochet (Area *A*)
Macadam/concrete[2]	100	1345	120
	150	1310	135
	200	1265	145
	250	1215	195
	300	1165	205
	350	1120	245
	400	1070	250
	450	1020	285
	500	965	310
	550	910	310
	600	855	325
	650	790	315
	700	710	310
	730	590	280

Notes:
[1] The soft soil condition assumes the soil is loosened, raked, and essentially rock free for the top 0.15 m
[2] For macadam/concrete at all ranges and for soil when first impact is fewer than 450 m, lateral dispersion is due to ricochet and occurs near maximum ricochet range. When the range is 450 m or more, the projectile does not ricochet from soil; therefore, lateral dispersion is due to ballistics only and occurs near the center of impact.
[3] The presence of large rocks and boulders in the area may necessitate the use of the macadam/concrete danger zones as the worst case.
[4] The medium soil condition assumes the soil is essentially rock free and of medium hardness (cone penetrameter values less than 150 between 0 and .076 m).
[5] Frozen soil, desert hard pan, and hard, dry soil are not considered medium soil and would represent a condition between medium soil and macadam/concrete. Use the more conservative dimension.

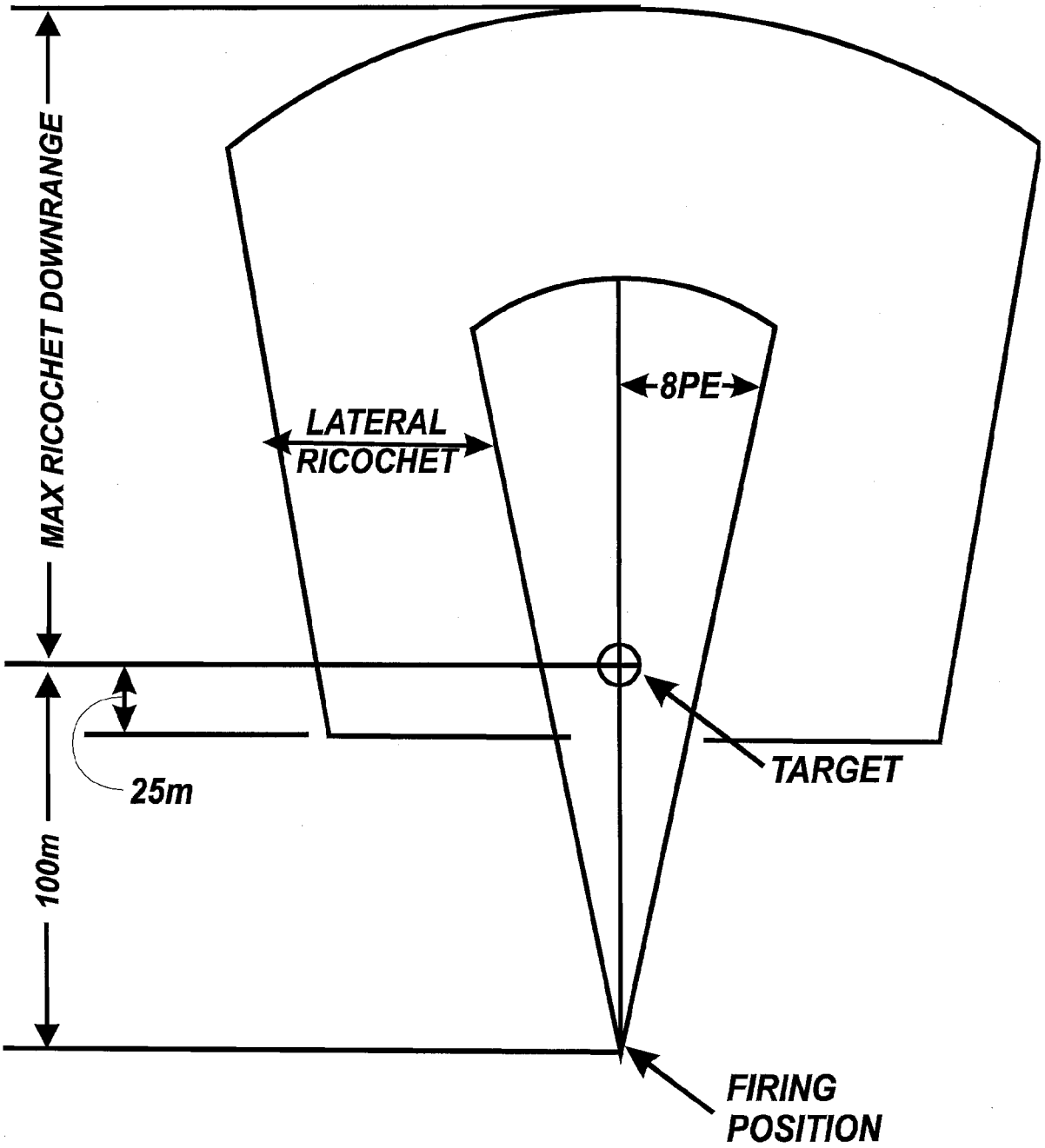

Figure 11–9. SDZ for firing field artillery trainer

(2) When the range to target distance falls between distances shown in table 11–8, the next larger distance will be used in developing the SDZ.

(3) The dimensions of the SDZ depend on the nature of firing and surface conditions. Range control and the range OIC will evaluate the firing conditions and training complex before using the minimum dimensions shown in table 11–8.

(4) Personnel access to the SDZ is prohibited unless positive protection is provided against projectile impacts and ricochets. When positioning of personnel within the SDZ is necessary, positive protection will be provided.

11–10. Multiple launch rocket system (MLRS)

a. Firing conditions.

(1) All nonmission essential personnel will be cleared from the SDZ.

(2) Meteorological data supplied to the fire control system will not be more than 4 hours old.

(3) Position determining system data must be verified as correct. Ensure that the launcher is properly calibrated, updated with a verified survey control point, and that startup data are correct.

(4) Fire control system internal tests must be successfully completed.

(5) Firings will not be conducted if—

(a) There is any question of proper operation of the launcher.

(b) The winds have changed dramatically since meteorological data was taken.

(c) The fire control panel shows that internal tests were not completed successfully.

(d) Any other sign of abnormal operation is evident.

(6) Safe separation distance between MLRS launchers firing simultaneously from a single point is 55 m. This distance is based on net explosives weight for launchers containing two full rocket pods.

b. SDZ.

(1) MLRS SDZ requirements for practice and tactical (for combat only, with M77 grenade payload) warheads are provided in table 11–9 and figures 11–10 and 11–11. Dimensions of the SDZ vary according to range to target and launcher height above mean sea level. The SDZ consists of an impact area, areas *A*, *B*, and *F*, and exclusion areas I, II, and III forming a rectangle around the target with a corresponding flight corridor back toward the launcher.

Table 11–9
Multiple Launch Rocket System SDZ criteria, in meters

Range to target	Area *W*	Distance *X*
Min to 11,500	840 m	Note[1]
11,501 to 15,000	1,000 m	[2]5,000 +H
15,001 to 20,000	1,300 m	[2]3,700 +H
20,001 to 23,000	1,500 m	[2]1,900 +H
23,001 to 27,000	1,900 m	[2]2,300 +H
27,001 to max	2,900 m	[2]2,700 +½H

Notes:

[1] For targets fewer than 11,500 m from the launcher, distance *X* will vary so that the distance from the launcher to the far edge of the impact area will be 16,700 + H m. Adding area *B*results in a minimum required distance of 18,000 + H m for short shots.

[2] H is the height of launcher above mean sea level in meters.

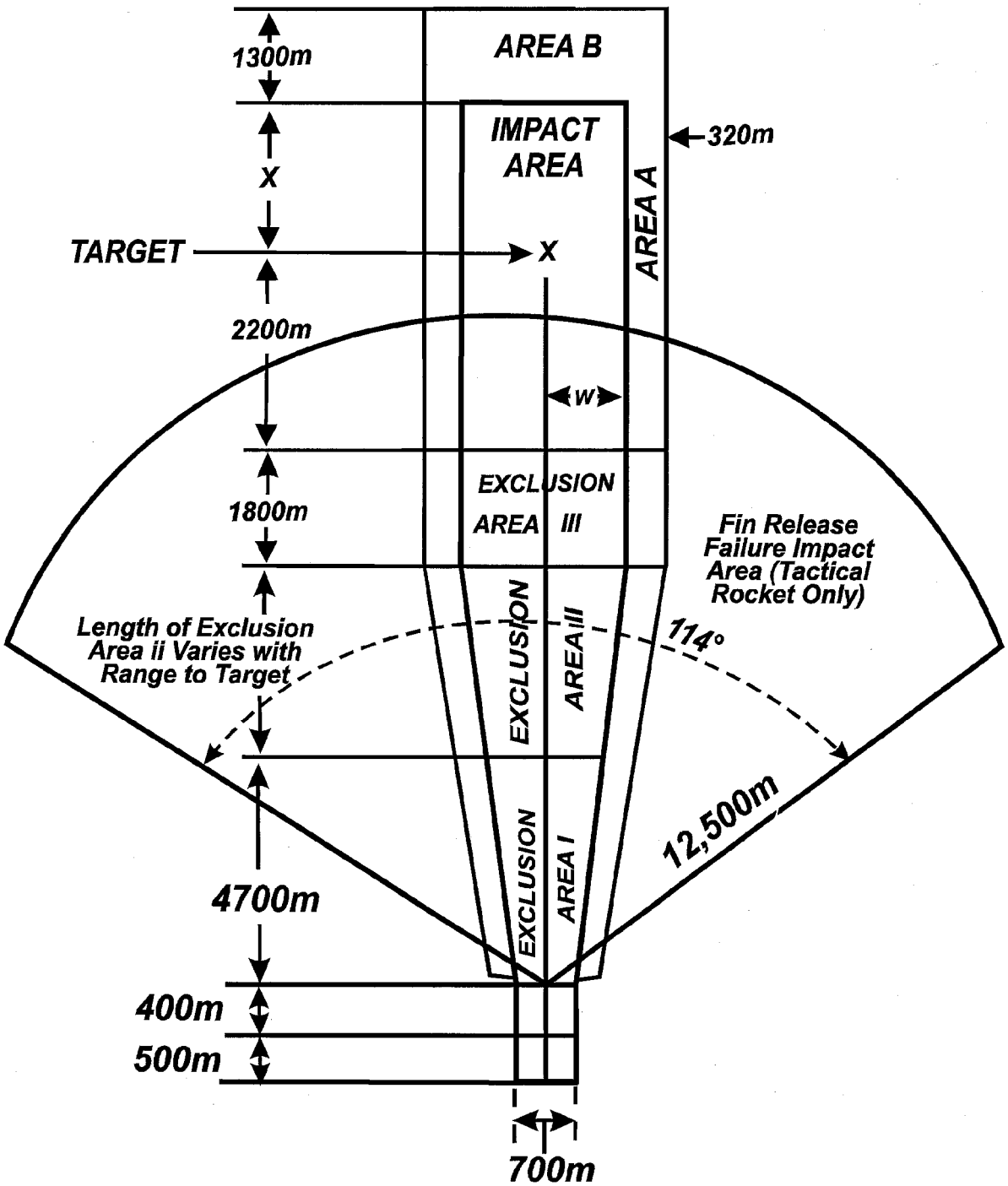

Figure 11–10. SDZ for firing multiple launch rocket system

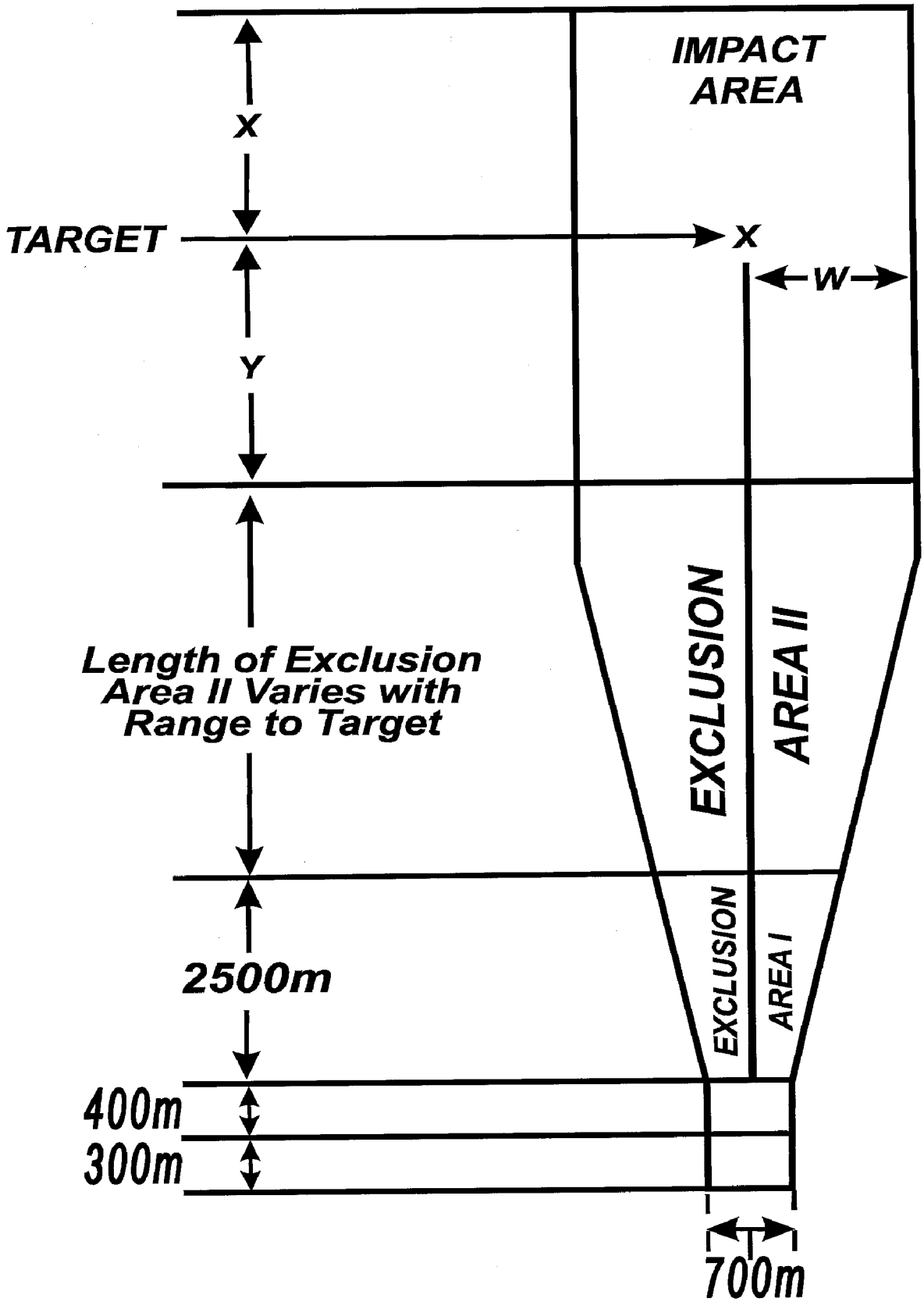

Figure 11–11. SDZ for firing multiple-launch rocket system M28A1 reduced-range practice rocket

(2) The rectangular impact area extends *X* meters beyond the target, a distance of area *W* to the left and right of the target, and 2,200 m from the target toward the launcher (distance *Y*). The construction of the SDZ is completed by connecting the near left and right corners of the rectangle to respective points 350 m to the left and right of the launcher. The impact area is designed to contain fragments and debris (payload, warhead skin and rocket motor) from normal functioning rockets. Distance *X* is adequate to contain rockets when the fuze fails to function.

(3) Area *A* is an area 320 m in width paralleling each side of the SDZ.

(4) Area *B* is an extension of the impact area and area *A* to a distance of 1,300 m beyond those areas.

(5) Exclusion area III is an area 1,800 m on the uprange side of the impact area and parallel to area *B*. This area is designed to contain fragments and debris from early functioning warheads at the near edge of the impact area.

(6) Exclusion area I is the 4,700-m area that extends forward of the launcher. It is endangered by premature fuze function or failure of the rocket motor during boost phase. Exclusion area I may be reduced to not fewer than 1,000 meters by deviation.

(7) Exclusion area II is the remaining area located between exclusion areas I and III once these areas are constructed. Occupation of exclusion area II by unprotected personnel is authorized only under an approved deviation.

(8) Area *F* is the area immediately to the rear of the launcher directly exposed to blast overpressure, fragments, and debris from rocket launch. Area *F* extends 350 m to each side of the launcher and 400 m to the rear. Personnel are prohibited from occupying area *F* during firing. A noise hazard area extends an additional 500 m past area *F* and may only be occupied by mission essential personnel wearing approved hearing protection.

(9) Fin release failure impact area is required only for tactical rockets. This area is a sector with an origin at the launcher with a radius of 12,500 m. It includes a total angular measurement of 114 degrees centered about the launch azimuth.

(10) MLRS safety computations are contained in FM 6–60 and MCRP 3–1.6.24. Values for area *W* and distance *X* in FM 6–60 and MCRP 3–1.6.24 have danger areas *A* and *B* included in their values.

11–11. MLRS reduced range practice rocket

a. Firing conditions for MLRS reduced range practice rocket (RRPR). These are the same as for standard MLRS. (See para 11–10*a*.)

b. SDZ.

(1) MLRS RRPR SDZ requirements are given in table 11–10 and figures 11–11 and 11–12.

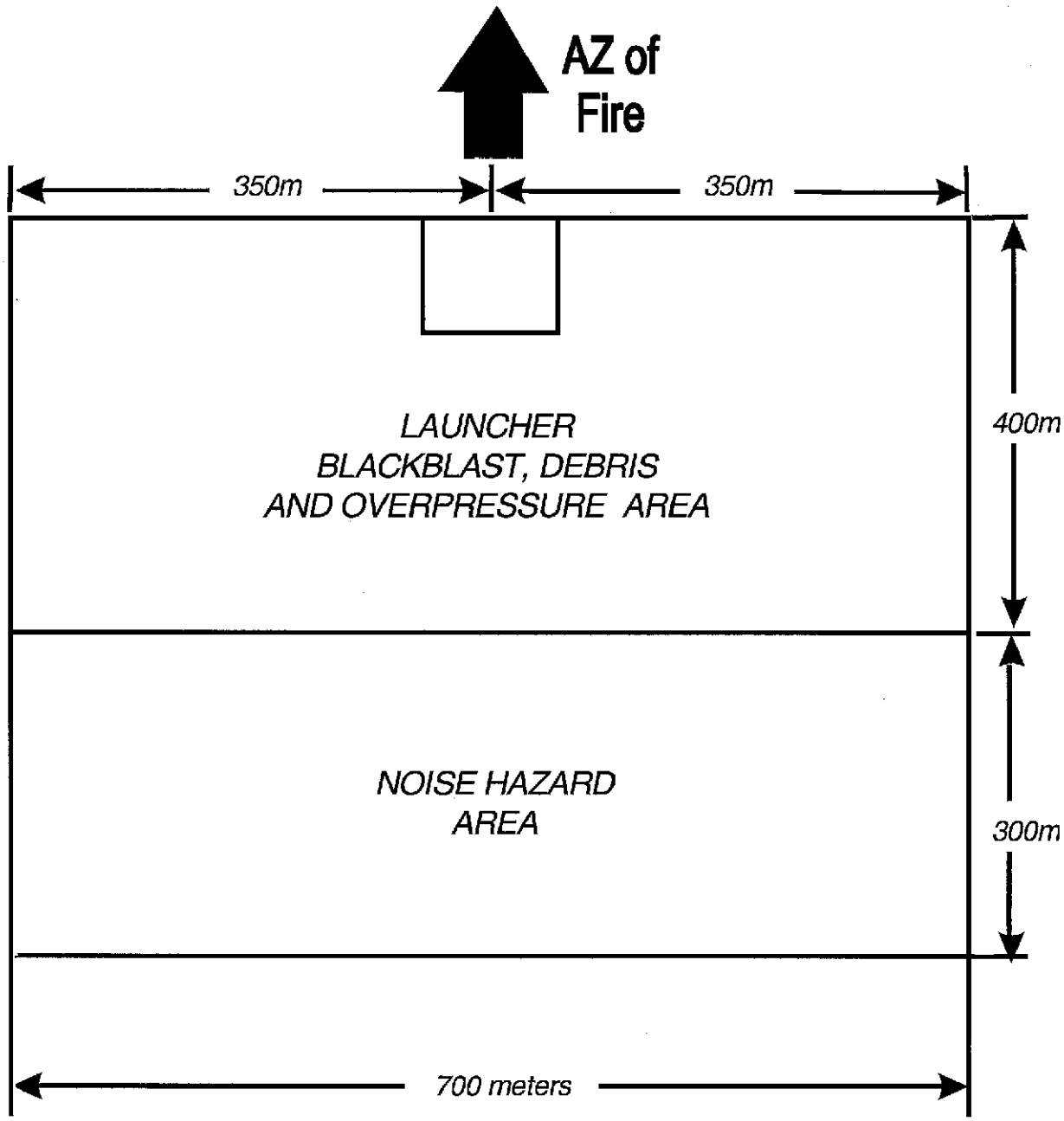

Figure 11–12. MLRS reduced-range practice rocket area *F*

(2) Dimensions of the SDZ vary according to range to target (table 11–10.) The SDZ consists of an impact area and exclusion areas I and II forming a rectangle around the target with a corresponding flight corridor back toward the launcher (see fig 11–11), and area *F* (see fig 11–12.)

(3) The rectangular impact area extends *X* meters beyond the target, a distance of area *W* to the left and right of the target, and *Y* meters from the target toward the launcher. The construction of the SDZ is completed by connecting the near left and right corners of the rectangle to respective points 350 m to the left and right of the launcher. The impact area is designed to contain fragments and debris. Since the RRPR does not have an explosive warhead event, areas *A* and *B* are not required.

(4) Exclusion area II is an area from the uprange side of the impact area back toward the launcher. Occupation of exclusion area II by unprotected soldiers is authorized only by deviation.

(5) Exclusion area I is the 2,500-m area that extends forward of the launcher. Personnel are endangered by failure of the rocket motor during boost phase. Exclusion area I can be reduced to not fewer than 1,000 m by deviation.

(6) Area *F* is the same as for the MLRS. A noise hazard area extends an additional 500 m past area *F* and may only be occupied by mission essential personnel wearing approved hearing protection.

c. Procedures for SDZ construction.

(1) Plot launcher position.

(2) Plot target location.

(3) Construct RRPR impact area around target, using information in figure 11–12 and table 11–10.

(4) At the launcher position, plot a point 350 m left and right of, and on line with, the forward edge of the MLRS launcher.

(5) Construct left and right lateral edges of flight corridor by connecting the left and right up range (near edge) corners of the impact area to the respective left and right points 350 meters each side of the MLRS launcher.

(6) Construct area *F* using information in figure 11–12.

d. Overhead fire.

(1) The RRPR is not certified for overhead fire. However, overhead fire may be conducted under deviation. The RRPR contains the same rocket motor failure potential as the basic rocket. However, because the RRPR does not have an explosive warhead event, the risk of firing over the heads of troops is less than with the basic practice rocket.

(2) To calculate the risk of injury to troops during overhead fire of RRPR under deviation, use a short round probability of 1 per 10,000 (0.001) firings when a 2,500-meter exclusion area *I* is used. If a 1,000-m exclusion area *I* is used, a short round probability of one per 1,000 firings should be used. This information should be used in conjunction with troop density and areas occupied to calculate risk to troops on a per shot basis.

(3) An evaluation of the RRPR flight corridor is necessary to ensure accurate risk assessment and provide options for improved training and firing flexibility. Two options for assessing probability are as follows:

(a) If a 2,500-m exclusion area *I* in front of the launcher is utilized, a short round probability of one per 10,000 firings should be applied.

(b) If a 1,000-meter exclusion area *I* in front of the launcher is utilized, a short round probability of one per 1,000 firings should be applied.

(4) For both options, the short-round hazardous debris area to be used for ranges up to 12 km is 300 × 100 m; for ranges from 12.1 km to 15 km, use 100 × 50 m.

(5) The calculations in figure 11–13 are provided to assist in determining risk of RRPR overhead fire and should be chosen based on the training mission requirements.

Probability of injury(ies) = ABC(E/D)

Probability of injury(ies) = AB(F/D)

Probability of vehicle damage = ABG(E/D)

Probability of injury (ies)/vehicle damage(s)= AB(H/I)

where:

A = Probability of short round

B = Number of rockets fired

C = Number of personnel exposed

D = Size of occupiable corridor (based on target distance, in M^2)

E = Estimate of short round impact debris area (300m x 100m or 100m x 50m)

F = Area occupied by tank trail, road, site, etc. (when exact number of personnel/vehicles not known) in M^2

G = Number of vehicles exposed

H = (Length of short round impact debris area) + (width of trail/road), in meters

I = Length of occupiable corridor, in meters

Figure 11–13. Formulas for determining risk of RRPR overhead fire

(6) These calculations provide for the ability to estimate a reasonable probability of injury(ies) or vehicle damage. They are estimates and assume a certain level of randomness and uniformity. The probabilities are established so that although grouping of troops could result in multiple injuries, this grouping would also realistically result in a lower overall probability of injury.

(7) MLRS safety computations are contained in FM 6–60 and MCRP 3–1.6.24.

Table 11–10
MLRS M28A1 reduced-range practice rocket SDZ criteria, in meters

Range	Distance *X*	Area *W*	Distance *Y*
8,000 to 9,000	2,450	560	2,730
9,001 to 10,000	2,100	620	2,300
10,001 to 11,000	1,800	685	1,980
11,001 to 12,000	1,560	760	1,700
12,001 to 13,000	1,475	850	1,400
13,001 to 14,000	1,580	950	1,250
14,001 to 15,000	1,760	1,050	1,150

Chapter 12
Tank/Fighting Vehicle Gunnery

12–1. Tank cannon firing conditions

a. Tank cannon will not be fired above 5 degrees QE (unless otherwise stated in this pamphlet.) The following procedures will be employed.

(1) Unit master gunners, in conjunction with range control personnel, will ensure that targets are placed at or less than 5 degrees elevation. Tank commanders will ensure that all weapon systems in a firing condition are pointed toward the impact area at or less than 5 degrees elevation.

(2) Nonstabilized tank armament will not be fired while the tank is moving. This does not include machineguns.

b. When firing ranges and weapons training facilities with less than the prescribed safety limits must be used, existing compensatory terrain features and offsetting control measures will be thoroughly evaluated. An approved deviation is required before firing on reduced SDZs.

c. Hard or soft targetry may be used.

d. Cross-range firing of weapon systems from firing positions at targets or target arrays on the opposite side of the range is permitted if the SDZ falls within allowable limits. Limits of fire, combined dispersion, ricochet areas, and areas *A* and *B* (when required) must be adjusted to compensate for and accommodate such cross-range firing. On ranges that do not permit cross-range firing, internal (inside the range area) left and right limit of fire markers will be used, in addition to the left and right external range limit markers.

e. Environmental containment materials (spill kits) will be available on all mounted ranges and during all refuel operations.

f. It is recommended that all installations firing tank weapons view the Master Gunner Newsletter on the master gunner web site at http://www.knox.army.mil/school/16cav. The Master Gunner Branch, 16th Cavalry Regiment, Ft. Knox, KY, publishes this newsletter.

12–2. Surface danger zone

a. Tank cannon SDZs for direct fire at fixed or moving ground targets from stationary or moving firing positions are as follows:

(1) General tank cannon cartridges (for example, those cartridges not specifically addressed in this pamphlet) use table 12–1 and figure 12–1. Maximum range (distance *X*) for constructing SDZs will be determined by using the horizontal range corresponding to 10 degrees QE provided in appropriate ballistic tabular firing tables unless otherwise stated in this pamphlet (for example, range-to-target data). Lateral dimensions must take into account length of baselines, maneuver areas, and target arrays to include length of moving targets. Distance *X* will not be reduced for any condition of firing unless an approved deviation is obtained, or unless provisions in this pamphlet dictate otherwise. Vertical hazard data for tank is not available. However, since the SDZ is three dimensional, a conservative vertical hazard can be calculated to clear aircraft over and beyond hard targets being engaged.

Table 12–1
General tank cannon cartridge SDZ criteria, in meters

Caliber	Area *A*[1]	Area *B*[1]	Distance direct fire[2]
105-mm gun	615	615	650
152-mm gun	715	715	675
165-mm CEV	750	750	1,000[3]

Notes:

[1] Areas *A* and *B* may be eliminated when firing inert practice projectiles at soft targets, except spotting charges or frangible projectiles which may eject a hazardous fragment.

[2] Direct fire distances are minimum distances required for safety of unprotected personnel from hazardous fragments resulting from firing HE projectiles. Vehicle must be buttoned up and all unprotected personnel must be provided positive protection against fragments.

[3] Hazardous fragments from exploding 165-mm HEP projectiles may travel out to 1,000 m in any direction from the point of detonation. During firing the vehicle must be buttoned up and all exposed personnel within 1,000 m of the detonation must be provided positive protection against fragments.

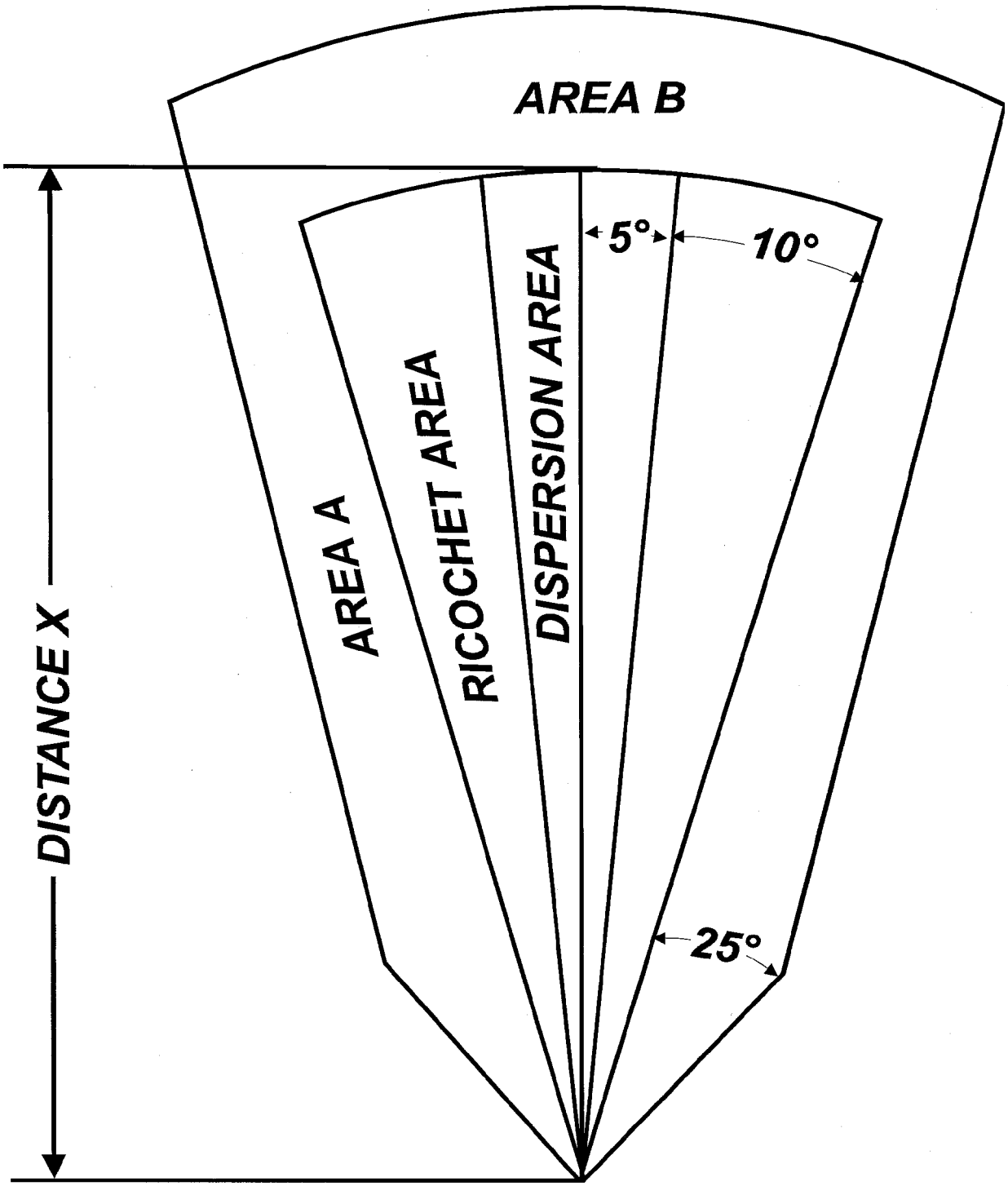

Figure 12–1. SDZ for firing general tank cannon cartridges

(2) Select tank cannon cartridges using table 12–2 and figure 12–2.

Table 12–2
Select tank cannon cartridge SDZ criteria

Cartridge type	Impact media[1]	Distance *X* at 10°[2]	Ricochet angle P°[3]	Maximum deflection *W*	Area *A*[4]	Area *B*[4]
			105mm			
M456 HEAT–T	Earth Steel	6,436 6,436	17 12	1,080 600	615 615	615 615
M490 TP–T	Earth Steel	6,445 6,445	17 12	1,080 600	NR NR	NR NR
M724 TPDS–T	Earth Steel	11,343 11,343	13 11	1,110 1,900	NR NR	NR NR
M735 APFSDS–T	Earth Steel	22,846 22,846	14 16	1,100 1,400	NR NR	NR NR
M774[5] APFSDS–T	Earth Steel	23,545 23,545	12 16	1,020 1,400	NR NR	NR NR
M833[5] APFSDS–T	Earth Steel	26,241 26,241	16 16	1,801 1,400	NR NR	NR NR
			120mm			
M829[5] APFSDS–T	Earth Steel	29,392 29,392	11 16	1,070 1,400	NR NR	NR NR
M829A2[5] APFSDS–T	Earth Steel	30,261 30,261	26 21	2,400 1,764	NR NR	NR NR
M830 HEAT–MP–T	Earth Steel	6,589 6,589	17 12	1,080 600	1,125 1,125	1,125 1,125
M830A1[5] HEAT–MP–T	Earth Steel	10,069 10,069	22 20	1,239 1,061	1,377 1,377	1,377 1,377
M831 HEAT–TP–T	Earth Steel	6,589 6,589	17 12	1,080 600	NR NR	NR NR
M865 TPCSDS–T	Earth Steel	7,234 7,234	12 16	450 1,400	NR NR	NR NR
XM908 HE–OR–T[6]	Earth Steel	10,069 10,069	22 20	1,239 1,061	1,377 1,377	1,377 1,377

Notes:

[1] When engaging armor targets, recommend using earth impact media, in those cases where earth impact values are larger due to the possibility of missing the target.

[2] The elevation of fire from the firing position to the target will not exceed 5°.

[3] Maximum deflection is maximum horizontal ricochet distance from the left and right limits of the dispersion angle.

[4] Practice ammunition with inert warheads and kinetic energy projectiles do not require (NR) area *A*, because the ricochet area will contain all possible fragments out to the final rest position, or an area *B* since the total range is expected to contain ricocheting projectiles down range.

[5] Ammunition is a wartime round. SDZ is advisory only. M774, M833, M829, M829A2 projectiles contain depleted uranium (DU) penetrator.

[6] HE–OR–T (high-explosive obstacle-reduction tracer).

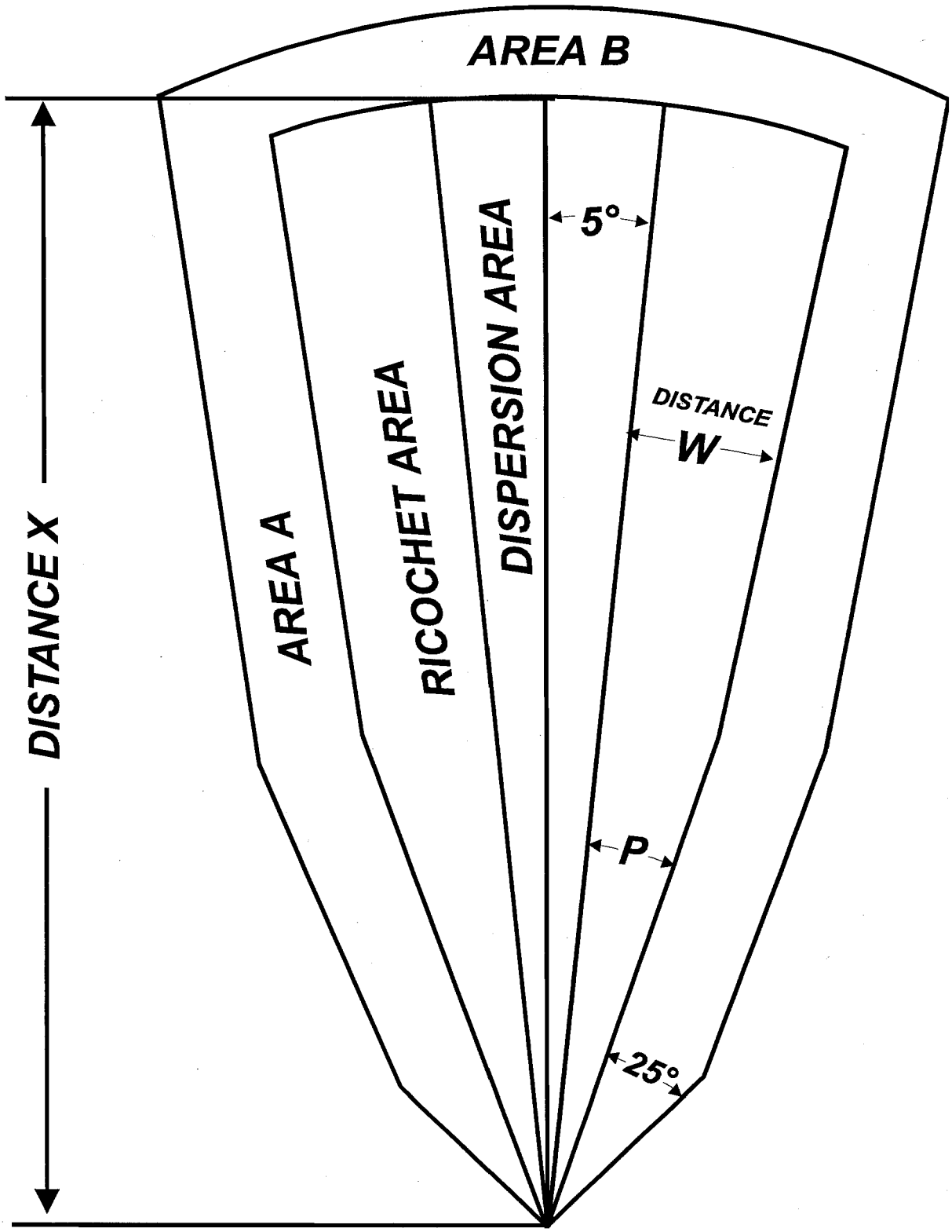

Figure 12–2. SDZ for firing select tank cannon cartridges

(3) For cartridge M901 (DM 128), TPCSDS–T, 105 mm, use table 12–3 and figure 12–2. SDZs constructed using table 12–3 will only be applied to ranges fired by experienced, fully qualified tank crews. Table 12–3 does not account for operational errors (that is, overshooting the target). For steel and concrete, angle *P* equals 16°. For earth and water, angle *P* equals 15°. Areas *A* and *B* are not required.

Table 12–3
DM 128 (M 901), TPCSDS–T, 105-mm cartridge SDZ criteria corresponding to target engagement distances

Altitude above mean sea level (MSL)	Air density	Target range	Distance *X*	Distance *W*
		(in meters)		
0	100.0	100	2,964	515
		500	3,087	503
		1,000	3,267	487
		2,000	3,760	445
		3,000	4,345	372
		4,000	4,941	218
		5,000	5,393	69
		6,000	6,018	2
500	98.5	100	2,992	521
		500	3,115	510
		1,000	3,304	494
		2,000	3,789	452
		3,000	4,373	380
		4,000	4,979	234
		5,000	5,423	76
		6,000	6,026	3
1,000	97.1	100	3,019	528
		500	3,142	516
		1,000	3,331	499
		2,000	3,817	458
		3,000	4,401	387
		4,000	5,017	247
		5,000	5,549	86
		6,000	6,048	5
1,500	95.1	100	3,046	534
		500	3,170	523
		1,000	3,360	506
		2,000	3,846	464
		3,000	4,428	395
		4,000	5,052	260
		5,000	5,508	94
		6,000	6,064	7

Table 12–3
DM 128 (M 901), TPCSDS–T, 105-mm cartridge SDZ criteria corresponding to target engagement distances—Continued

Altitude above mean sea level (MSL)	Air density	Target range	Distance *X*	Distance *W*
		(in meters)		
2,000	94.3	100	3,074	541
		500	3,198	529
		1,000	3,388	512
		2,000	3,874	471
		3,000	4,457	402
		4,000	5,089	273
		5,000	5,546	103
		6,000	6,077	11
2,500	92.9	100	3,012	548
		500	3,227	536
		1,000	3,417	519
		2,000	3,904	477
		3,000	4,486	409
		4,000	5,124	286
		5,000	5,586	113
		6,000	6,103	14
3,000	91.5	3,132	555	100
		500	3,258	543
		1,000	3,448	526
		2,000	3,935	484
		3,000	4,517	300
		4,000	5,161	124
		5,000	5,630	124
		6,000	6,142	20
3,500	90.1	100	3,066	541
		500	3,912	530
		1,000	3,382	512
		2,000	3,867	473
		3,000	4,449	412
		4,000	5,099	309
		5,000	5,581	132
		6,000	6,076	22
4,000	88.8	100	3,191	569
		500	3,317	557
		1,000	3,508	540
		2,000	3,996	498
		3,000	4,578	431
		4,000	5,229	326
		5,000	5,716	146
		6,000	6,201	31

Table 12–3
DM 128 (M 901), TPCSDS–T, 105-mm cartridge SDZ criteria corresponding to target engagement distances—Continued

Altitude above mean sea level (MSL)	Air density	Target range	Distance *X*	Distance *W*
		(in meters)		
4,500	87.5	100	3,221	577
		500	3,347	565
		1,000	3,538	547
		2,000	4,027	504
		3,000	4,609	438
		4,000	5,260	338
		5,000	5,763	156
		6,000	6,233	34
5,500	84.9	100	3,283	591
		500	3,410	579
		1,000	3,602	561
		2,000	4,090	518
		3,000	4,673	453
		4,000	5,325	360
		5,000	5,859	183
		6,000	6,320	50
6,000	83.6	100	3,315	599
		500	3,442	587
		1,000	3,634	569
		2,000	4,123	525
		3,000	4,706	460
		4,000	5,357	372
		5,000	5,907	196
		6,000	6,360	60
6,500		100	3,348	607
		500	3,476	595
		1,000	3,668	577
		2,000	4,157	533
		3,000	4,741	469
		4,000	5,390	383
		5,000	5,960	214
		6,000	6,401	66
7,000		100	3,379	615
		500	3,508	602
		1,000	3,700	584
		2,000	4,189	540
		3,000	4,773	478
		4,000	5,420	392
		5,000	6,010	228
		6,000	6,445	76

(4) For cartridge M968, 35-mm tank precision gunnery inbore device (TPGID), use table 12–4 and figure 12–2.

Table 12–4
SDZ criteria for firing M968, 35-mm TPGID cartridge corresponding to target ranges, in meters

Target range	Distance *X*	Ricochet angle (p°)	Maximum deflection (w)	Vertical hazard distance
Impact media steel				
100	5,750	42	2,301	1,133
500	6,991	35	2,078	1,068
1,000	6,230	29	2,191	980
1,500	7,237	26	2,245	876
2,000	6,776	23	2,067	775
2,500	7,557	19	1,735	670
3,000	7,453	17	1,732	527
3,500	7,779	14	1,600	384
4,000	8,190	10	1,101	272
4,500	8,585	10	1,126	197
5,000	9,076	8	995	150
5,500	8,620	7	629	188
6,000	8,556	5	622	262
Impact media concrete				
100	6,051	37	2,023	974
500	6,261	30	2,068	916
1,000	6,797	27	1,961	840
1,500	6,476	26	2,180	760
2,000	6,613	20	1,649	671
2,500	7,144	17	1,548	546
3,000	7,530	14	1,298	442
3,500	7,816	11	1,190	318
4,000	8,864	11	1,100	217
4,500	8,327	8	883	160
5,000	8,096	6	670	139
5,500	8,238	6	751	188
6,000	8,243	4	405	262
Impact media earth				
100	5,799	27	1,786	642
500	5,902	24	1,844	622
1,000	6,150	20	1,725	565
1,500	6,752	17	1,225	505
2,000	6,995	14	1,165	444
2,500	7,005	13	1,211	354
3,000	7,914	10	1,020	279
3,500	7,713	10	980	193
4,000	7,752	8	748	165
4,500	7,365	6	658	132

Table 12–4
SDZ criteria for firing M968, 35-mm TPGID cartridge corresponding to target ranges, in meters—Continued

Target range	Distance *X*	Ricochet angle (p°)	Maximum deflection (w)	Vertical hazard distance
5,000	7,590	6	434	130
5,500	7,745	3	307	188
6,000	7,257	1	68	262
Impact media water				
100	5,722	30	1,559	642
500	5,944	22	1,528	605
1,000	6,195	20	1,495	557
1,500	6,771	17	1,487	504
2,000	6,889	15	1,458	437
2,500	6,934	13	1,393	362
3,000	7,633	11	1,268	273
3,500	8,114	9	847	188
4,000	7,380	6	591	162
4,500	7,360	5	495	130
5,000	8,299	3	328	98
5,500	7,047	2	166	51
6,000	7,027	1	70	29

b. The SDZ for APERS is covered in chapter 11, paragraph 11–5, figure 11–4, and table 11–3.)

12–3. Fighting vehicles

a. SDZ requirements for the M242 25-mm cannon are provided in table 12–5 and figure 12–3.

Table 12–5
25-mm SDZ criteria, in meters

Impact media	Area *A*[1]	Area *B*[1]	Area *W*[2]	Angle *P*	Distance *X*[3]	Ricochet range	15° elev range
M791 (APDS–T)							
Armor	N/A	N/A	1,510	24°	14,572	7,294	11,550
Concrete	N/A	N/A	2,208	34°	14,572	7,622	11,550
Earth	N/A	N/A	1,466	18°	14,572	7,402	11,550
Water	N/A	N/A	263	6°	14,572	5,665	11,550
M792 (HEI–T)							
Armor	300	400	1,373	28°	6,379	5,265	5,241
Concrete	300	400	1,290	27°	6,379	5,071	5,241
Earth	300	400	908	19°	6,379	4,792	5,241
Water	300	400	1,047	19°	6,379	4,823	5,241
M793 (TP–T)							
Armor	N/A	N/A	1,373	28°	6,047	5,265	5,112
Concrete	N/A	N/A	1,290	27°	6,047	5,071	5,112
Earth	N/A	N/A	908	19°	6,047	4,792	5,112
Water	N/A	N/A	1,047	19°	6,047	4,823	5,112
M910 (TPCSDS–T)							
Armor	N/A	N/A	799	20°	6,404	4,472	6,017

Table 12–5
25-mm SDZ criteria, in meters—Continued

Impact media	Area *A*[1]	Area *B*[1]	Area *W*[2]	Angle *P*	Distance *X*[3]	Ricochet range	15° elev range
Concrete	N/A	N/A	1,143	27°	6,404	4,643	6,017
Earth	N/A	N/A	734	15°	6,404	4,592	6,017
Water	N/A	N/A	148	4°	6,404	3,724	6,017
M919 (APFSDS–T)[4] (Wartime only)							
Armor	N/A	N/A	1,289	25°	18,480	7,867	14,816
Concrete	N/A	N/A	1,289	25°	18,480	7,867	14,816
Earth	N/A	N/A	801	21°	18,480	7,725	14,816
Water	N/A	N/A	801	21°	18,480	7,725	14,816

Notes:

[1] Area *A* and area *B* are not applicable (N/A) for M791, (APDS–T), M793 (TP–T), M910 (TPCSDS–T), or M919 (APFSDS–T) cartridges.

[2] When firing at aerial targets and the gun elevation is greater than 15°, the ricochet area as defined by area *W* and angle *P* is not required.

[3] Distance *X* (maximum range) may be reduced to ricochet range when engaging ground targets at ranges up to 3,500 m from stationary firing positions. When firing from a moving vehicle over level terrain at ground targets up to 3,500 m, use the 15° elevation range. When firing on the move over rough terrain, use distance *X*.

[4] All personnel within 76 m of M919, 25-mm firing will wear approved hearing protection.

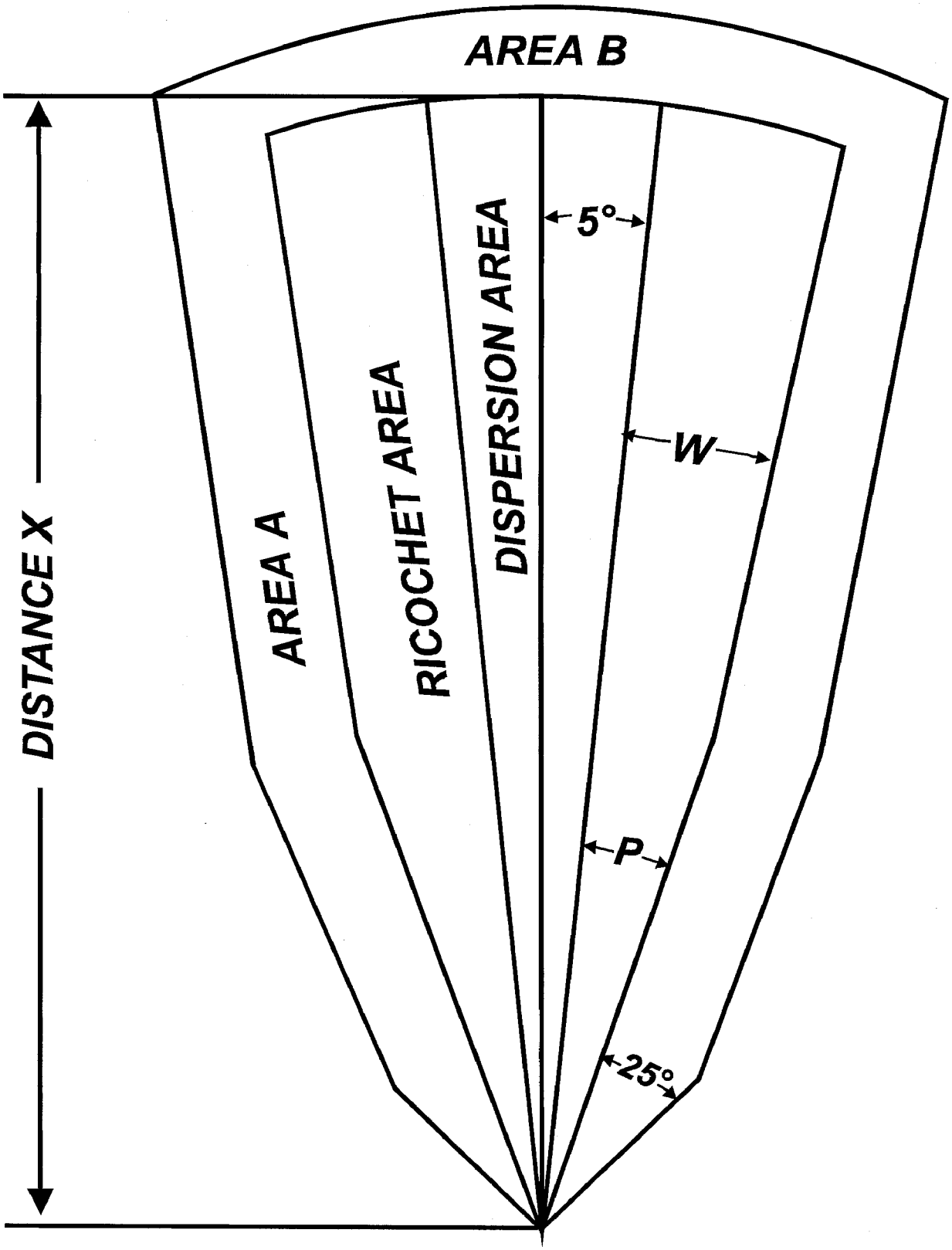

Figure 12–3. SDZ for firing 25-mm cannon cartridges

b. SDZ requirements for firing port weapon systems are provided in chapter 6 (small arms criteria) and figure 12–4. Firing port weapon systems may be fired selectively or as part of a course provided—

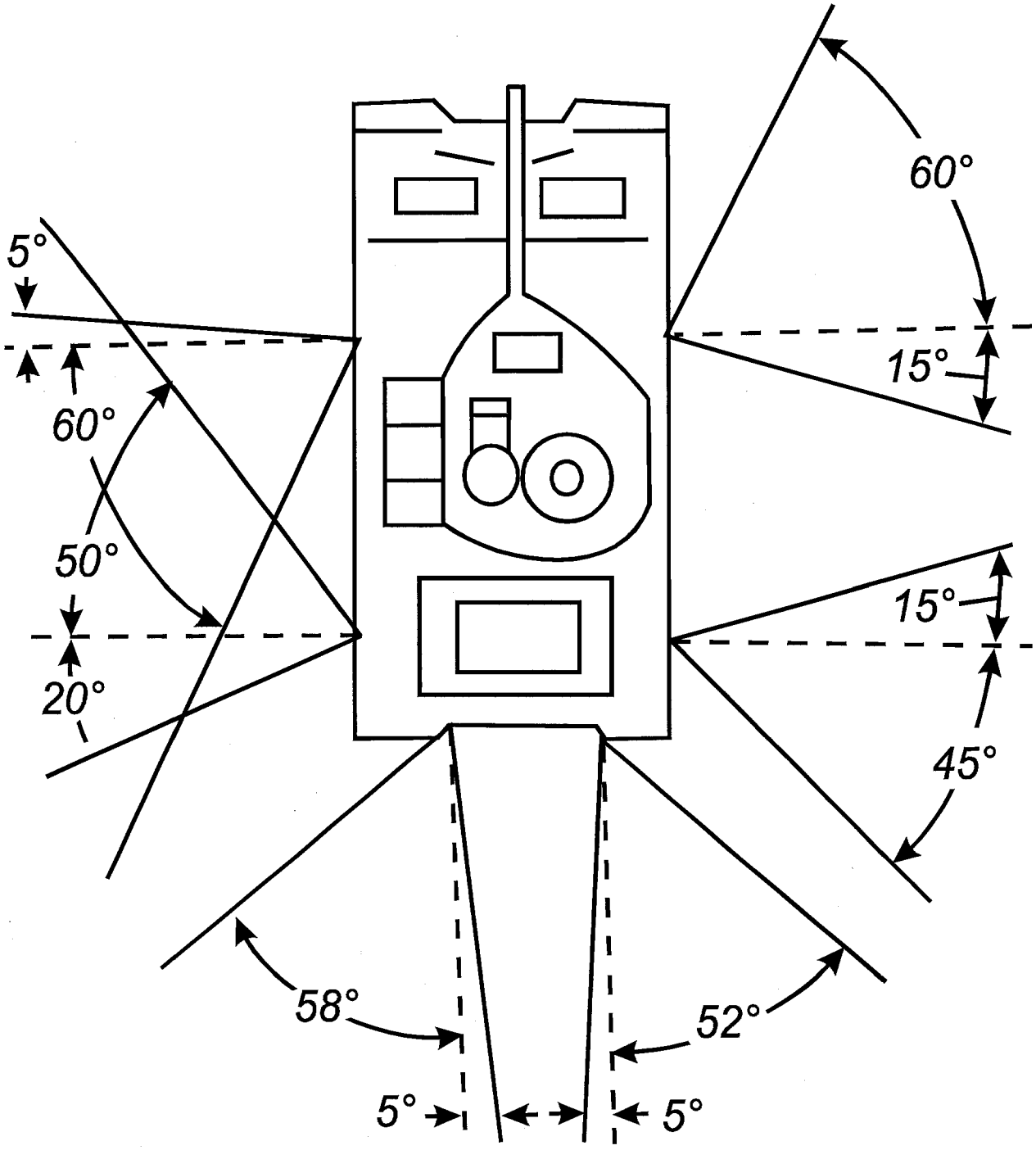

Figure 12–4. SDZ for Bradley fighting vehicle firing port weapon systems

(1) Sufficient terrain is available to accommodate the weapon system's SDZ fired at its extreme elevation and limits of traverse.

(2) An established impact area exists with targets or target arrays.

c. Coaxial machinegun SDZ requirements are provided in chapter 6.

d. 25-mm Sabot discard hazard area information is provided in figure 12–5.

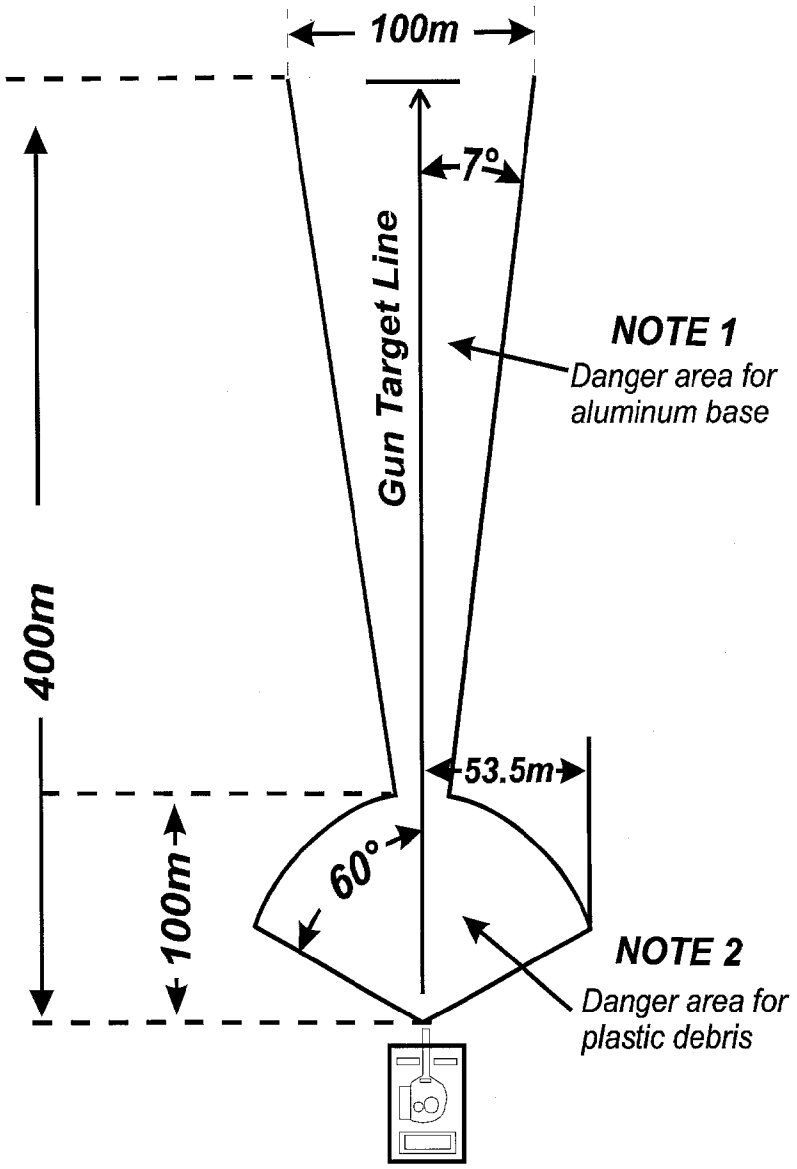

Notes:

[1] Aluminum base discard hazard area is a triangle with the apex at the muzzle. The depth is an extension of the line of the bore 400 m forward, with a 100-m base. For moving target engagements this is computed as 7° each side of the limits of fire.

[2] Plastic sabot discard hazard area is a triangle with the apex at the muzzle. The depth is an extension of the line of the bore 100 m forward, with a 107-m base. For moving or multiple targets engagements this is computed as 60° each side of the limits of fire.

Figure 12–5. 25-mm Sabot discard hazard area

12–4. Subcaliber tank gunnery devices

a. SDZ will be constructed as shown in figure 12–1.

b. The dimensions in table 12–6 will be used based on munition caliber.

Table 12–6
Subcaliber devices SDZ criteria, in meters

Caliber	Device	Area *A*	Area *B*	Distance *X* at 10° (178 mils) or less
.22 LR	DVC–D17–53, cal .22 in-bore	100	N/R	1,075
5.56 mm	DVC–D17–87 Brewster	100	N/R	2,250
7.62 mm	DVC–D17–87 Brewster (single shot)	100	N/R	3,100
.50-caliber spotter round	90mm in-bore	100	N/R	3,600
.50-caliber spotter round	105mm IN–BORE	100	N/R	3,600
20-mm HE–I–T	RILEY IN–BORE	300	400	4,438

Legend for Table 12-6:
N/R = Not required

12–5. Grenade launchers

a. Firing conditions.

(1) SDZ occupation by unprotected personnel in the open is prohibited.

(2) Grenades will not be fired into strong head winds.

(3) Personal protective equipment, that is, head, face, eye, and hand protection, will be worn by personnel within the SDZ.

(4) Clothing will fit snugly to prevent red phosphorous fragments from getting inside battle dress uniforms, particularly around the neck, ends of sleeves, and pockets.

b. SDZ.

(1) The L8A1 and L8A3 grenades are designed to launch out 30 m from the vehicle before functioning. Hazard distances of 125 m from the vehicle in the direction of fire and 50 m to the rear will be applied in accordance with figure 12–7. SDZ requirements for firing the L8A1 and L8A3 smoke grenades are provided in figure 12–6.

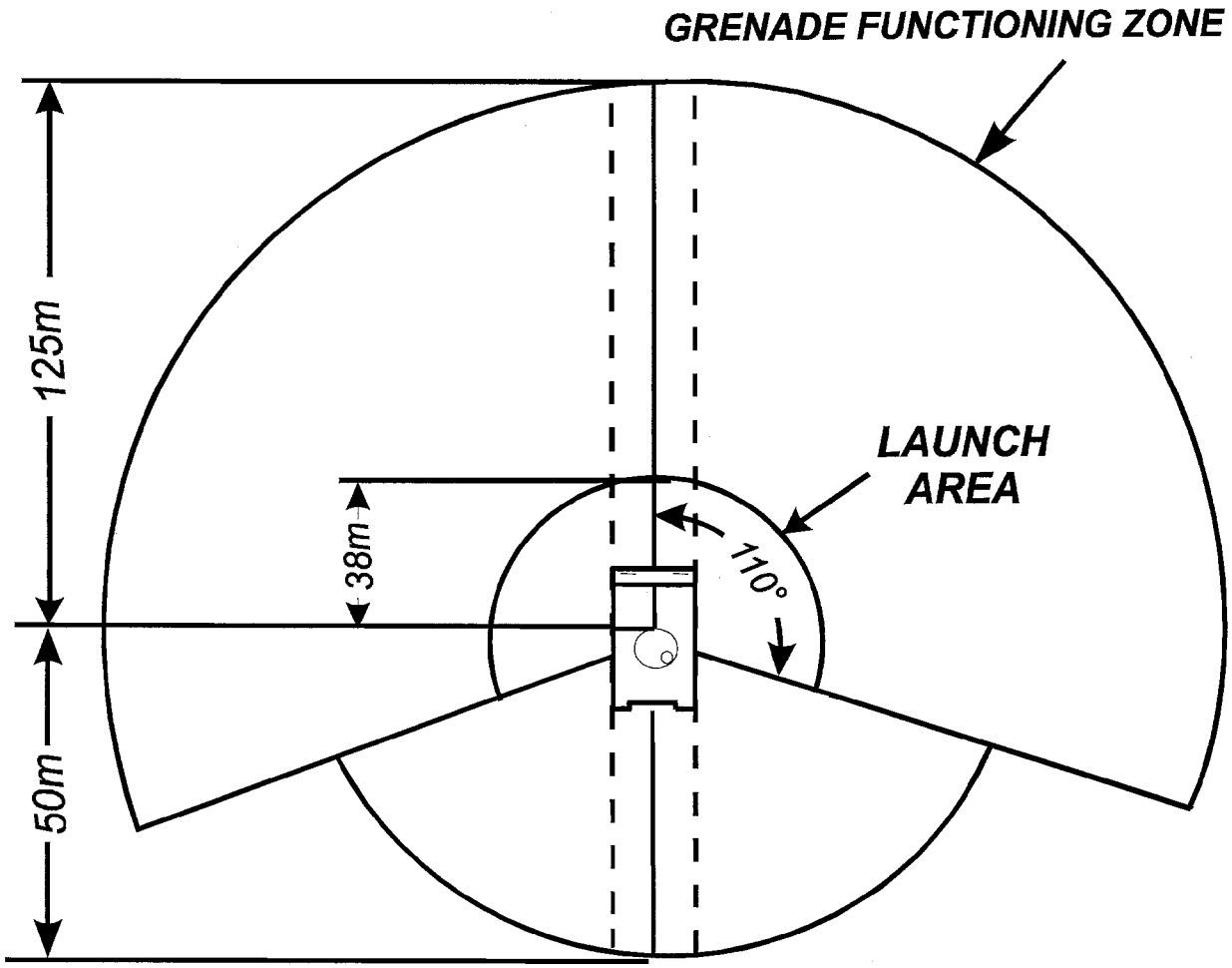

Figure 12–6. SDZs for firing L8A1/A3 grenades

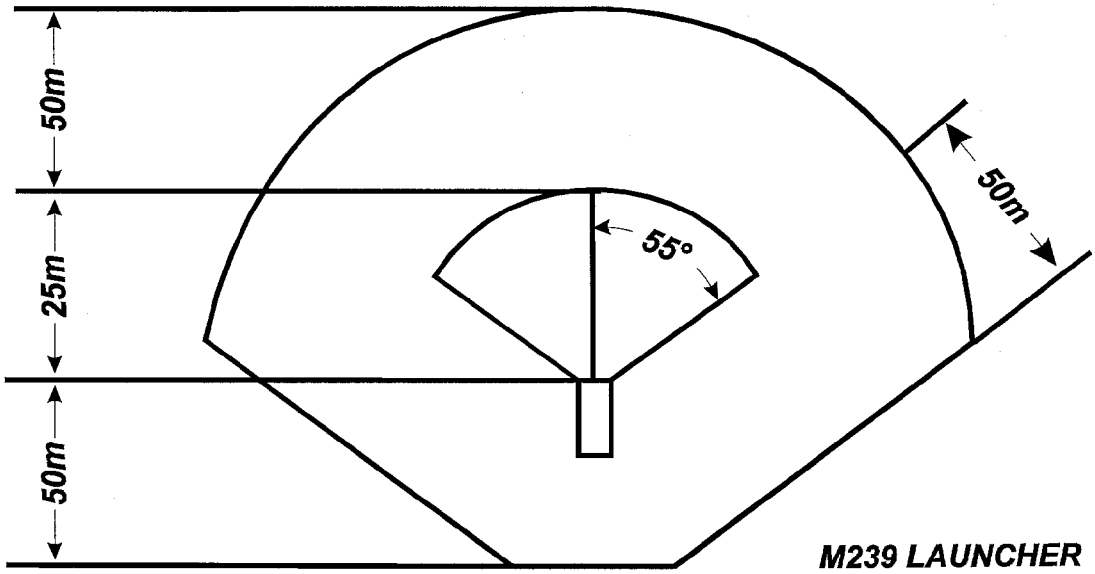

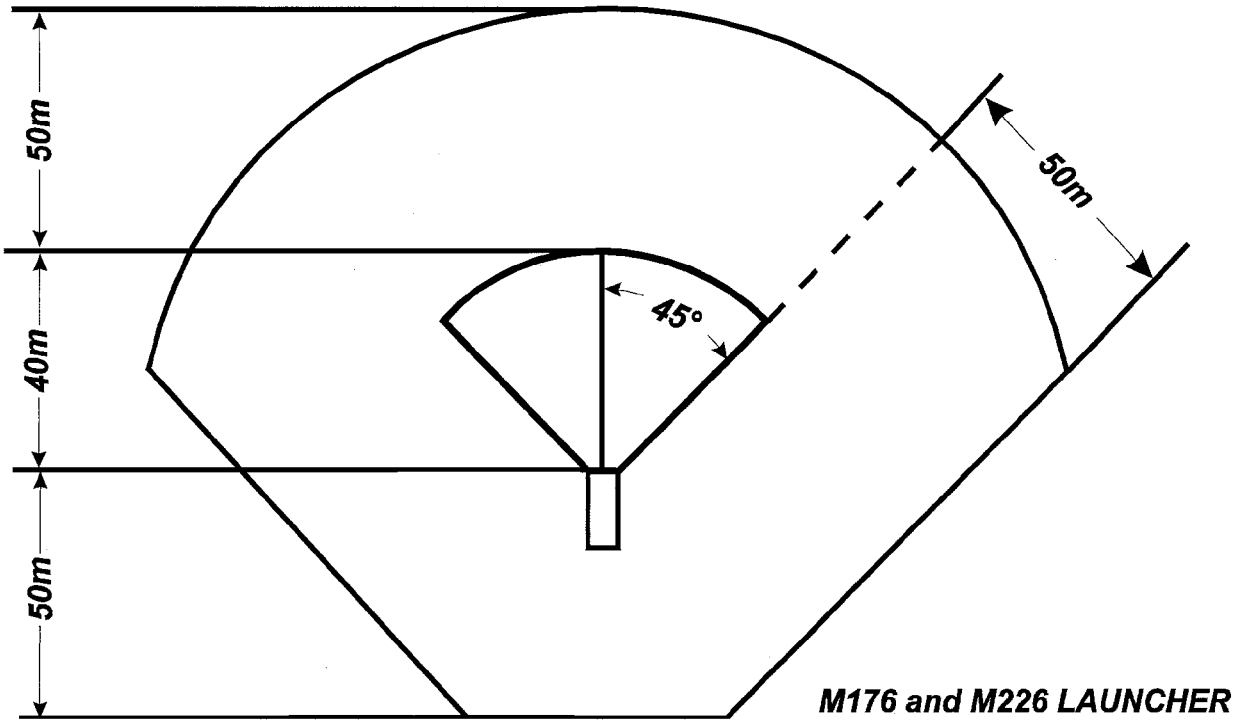

Figure 12–7. SDZs for firing grenades from M176, M226, and M239 grenade launchers

(2) SDZ requirements for the M176, M226, and M239 grenade launchers are provided in figure 12–7. Dimensions shown in figure 12–7 are for illustrative purposes only.

(3) SDZ requirements for the M81 are provided in figure 12–8.

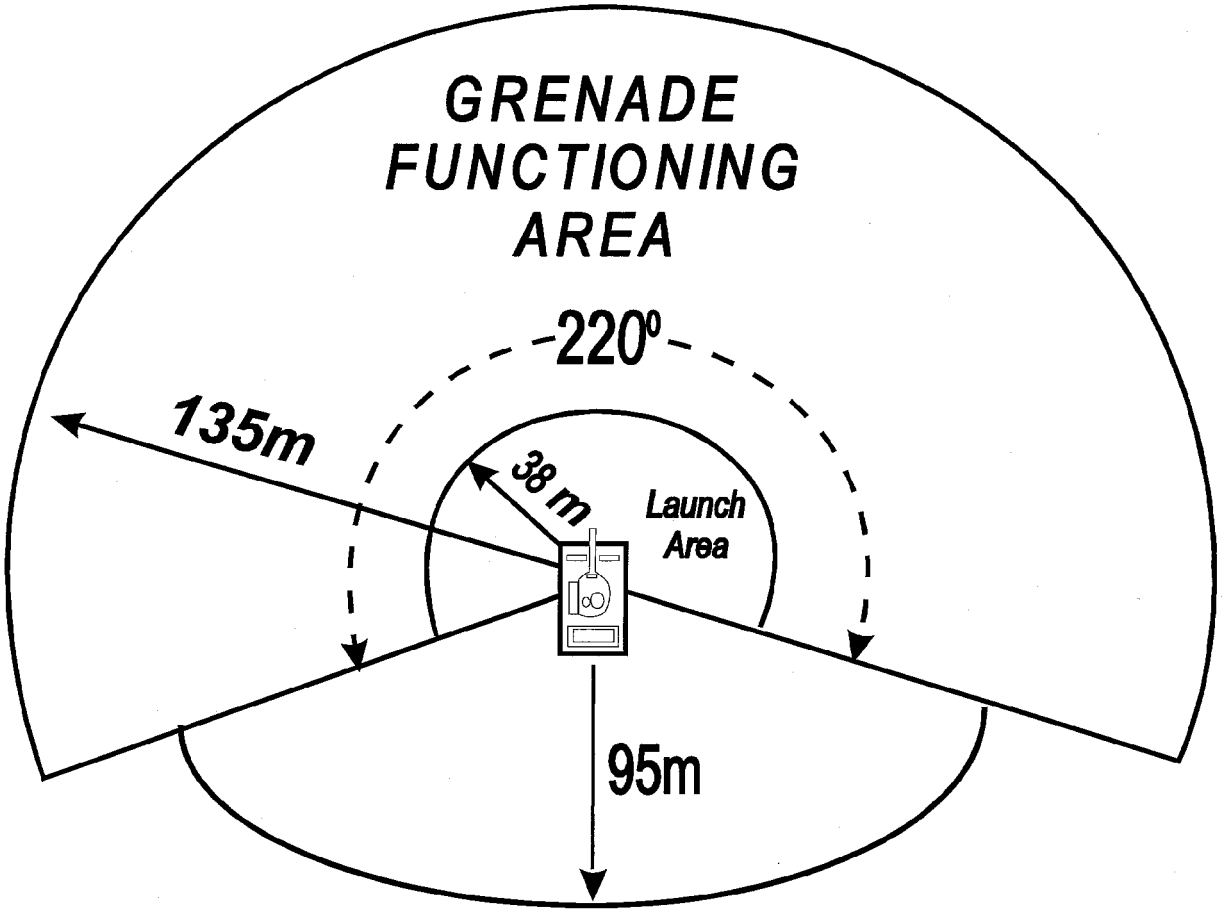

Figure 12–8. SDZs for firing M81 grenade, using standard 66-mm launchers on armored vehicles

(4) SDZ requirements for the M82 are provided in figure 12–9.

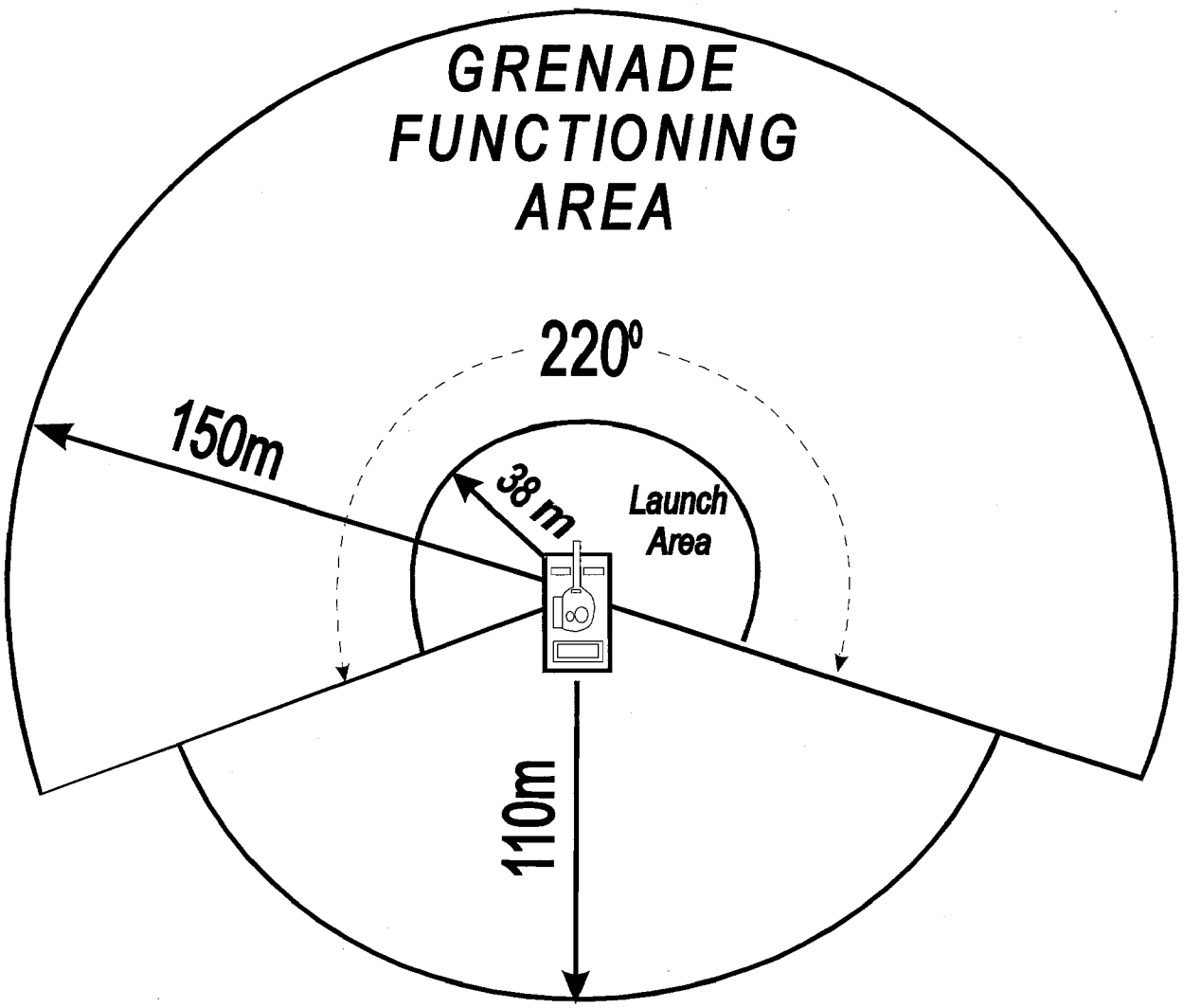

Figure 12–9. SDZs for firing M82 grenades, using standard 66-mm launchers on armored vehicles

12–6. Weapons effect signature simulator

Personnel within 25 m of the weapons effect signature simulator (Hoffman device) will wear approved single hearing protection. Eye protection will be worn.

12–7. Hazardous impulse noise exposure

a. The driver's hatch must be closed tight at all times when the main weapon is fired. Exposure limits and contour distances to hazardous impulse noise in excess of 140 decibels peak level (dBP) from various 105-mm and 120-mm tank cannon cartridges are based on health hazard assessment reports. Tables 12–7 and 12–8 list exposure limits for tank main gun firings.

Table 12–7
Exposure limits to hazardous impulse noise from tank 105-mm main gun cartridges (per 24 hours)

Cartridge caliber	Cartridge type	Tank	Commander exposed[1,2]	Loader exposed[1,2]	Examiner exposed[1,2]	Commander adjacent tank
105 mm	DM128	M1	5	0[3]	28	36
105 mm	M490A1	M1	10	10	0[4]	20
105 mm	M490A1	M48A5	17	25	8	17
105 mm	M490A1	M60A3	110	17	22	35

Notes:
[1] Exposed means the head of the crew member, or examiner, is above the hatch plane.
[2] Double hearing protection will be worn when exposure is in excess of the daily exposure limit. Use of double hearing protection increases the daily exposure limits as determined by the Surgeon General.
[3] Loader may not have his/her head protruding above the open hatch while firing the main gun.
[4] Do not allow tank crew examiner or other personnel on the outside of a firing tank.

Table 12–8
Exposure limits to hazardous impulse noise from tank main gun for selected 120-mm cartridges (per 24 hours)

Cartridge type	Firing condition	Single hearing protection[1]	Double hearing protection[2]
		Maximum rounds per day	
M831 (TP–T)	Exposed CDR	16	320
M831 (TP–T)	Exposed LDR/EVAL	11	220
M831 (TP–T)	Rear deck	95	NPL
M831 (TP–T)	Interior CDR (hatch open)	NPL	NPL
M831 (TP–T)	Interior driver (CDR/LDR hatch open)	NPL	NPL
M831 (TP–T)	Exposed CDR adjacent tank	15	300
M831 (TP–T)	Exposed LDR adjacent tank	15	300
M831A1 (TP–T)	Exposed CDR	45	894
M831A1 (TP–T)	Exposed LDR/EVAL	20	400
M831A1 (TP–T)	Rear deck	52	NPL
M831A1 (TP–T)	Interior CDR (hatch open)	215	NPL
M831A1 (TP–T)	Interior driver (CDR/LDR hatch open)	73	NPL
M831A1 (TP–T)	Exposed CDR adjacent tank	65	NPL
M831A1 (TP–T)	Exposed LDR adjacent tank	66	NPL
M865 (TPCSDS–T)	Exposed CDR	0	0
M865 (TPCSDS–T)	Exposed LDR/EVAL	0	0
M865 (TPCSDS–T)	Rear deck	13	260
M865 (TPCSDS–T)	Interior CDR (hatch open)	27	549
M865 (TPCSDS–T)	Interior driver (CDR/LDR hatch open)	NDA	NDA
M865 (TPCSDS–T)	Exposed CDR adjacent tank	ENA	0
M865 (TPCSDS–T)	Exposed LDR adjacent tank	0	0

Legend for Table 12-8:
NPL = No practical limit.
ENA = Exposure not allowed.
NDA = No data available.

Notes:
[1] Single hearing protection includes approved earplugs, earmuffs, combat vehicle crewman helmet, or headset.
[2] Double hearing protection includes the use of approved earplugs in combination with earmuffs, combat vehicle crewman helmet, or headset.

b. Numerous health hazard assessment reports define hazardous impulse noise contours for various tank main gun and secondary armament cartridges exceeding 140 dBP. Table 12–9 summarizes these contour requirements, and figure 12–10 illustrates the hazardous impulse noise contours in relation to the GTL. Data for locations forward of tank weapon systems are not available. Impulse noise levels in front of tank systems are expected to be higher than to the sides and rear.

Table 12–9
Hazardous impulse noise contours for various tank cannon cartridges

Cartridge	Caliber (mm)	Distance to 140 dBP contours		
		90°	135°	180°
DM128	105 mm	500	NDA	100
M490	105 mm	501	NDA	NDA
M490A1	105 mm	400	NDA	200
DM23	120 mm	627	559	NDA
M827	120 mm	380	304	152
M831	120 mm	444	314	152
M865	120 mm	501	355	NDA
M866	120 mm	380	304	152
M968	35 mm	130	NDA	NDA
All	.50 caliber	32	16	NDA
All	7.62 mm	15	7	NDA

Legend for Table 12-9:
NDA = No data available

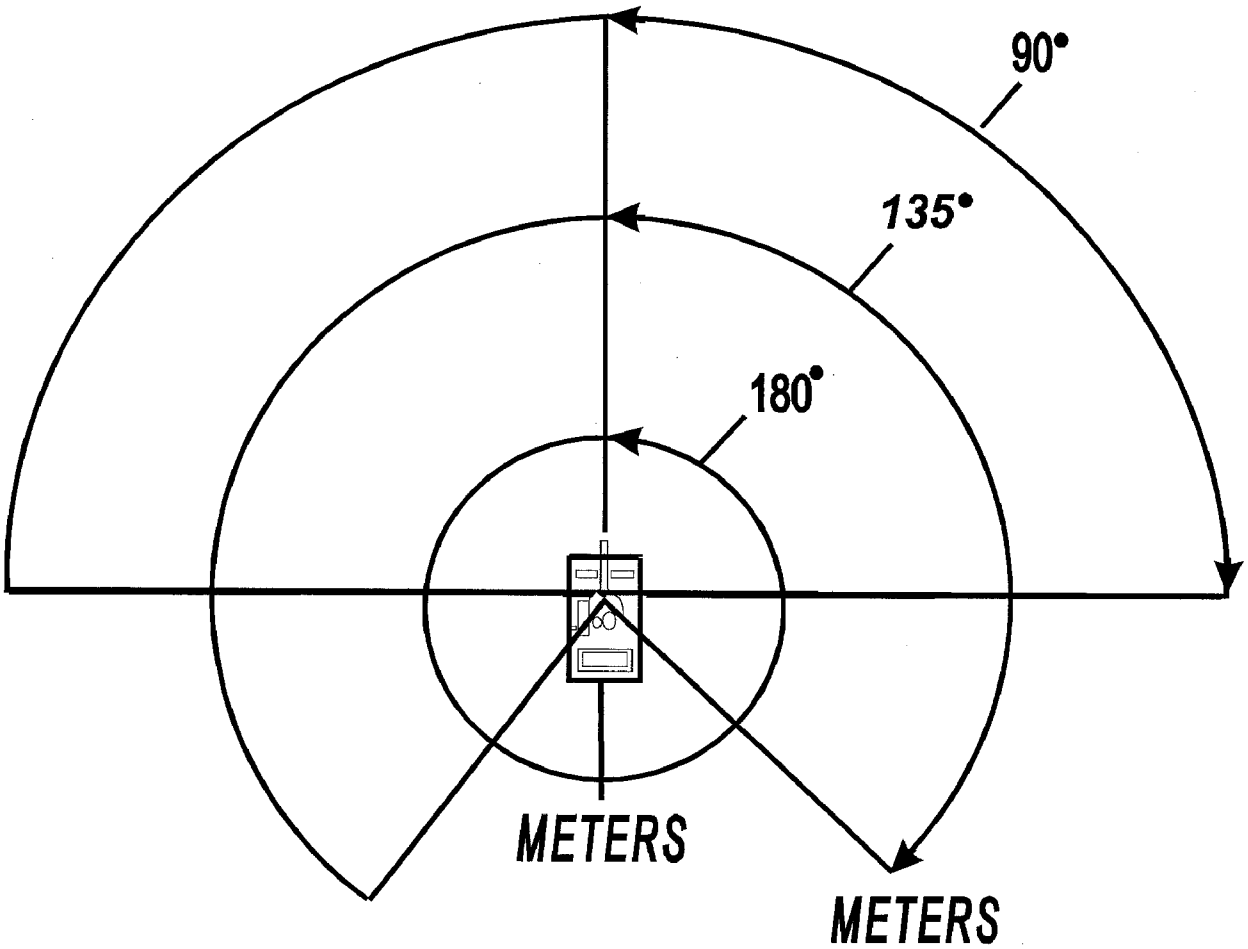

Figure 12–10. Hazardous impulse noise (140 dBP) contour zones

c. Firing conditions.

(1) Only personnel wearing approved single hearing protection will be allowed within 140 dBP contour zones during tank main gun firings.

(2) Nonmission essential personnel will be restricted from areas 10 m to the sides and from all areas forward of firing vehicles.

12–8. Firing vehicle status designations

a. During daylight and good visibility, flags or lights will be displayed on firing vehicles. At night and during reduced visibility, lights will be displayed. The following light or flag color designations will be used within the training complex as required:

(1) Yellow: Vehicle has malfunction. Yellow is used only in conjunction with red or green.

(2) Red and green: Vehicle is preparing to fire or the crew is performing a nonfiring exercise. Weapon systems are clear but not elevated.

(3) Red and yellow: Vehicle has a malfunction or misfire. Weapon systems are not clear and are pointed downrange.

(4) Green and yellow: Vehicle has a malfunction. Weapon systems are clear.

(5) Red: Vehicle engaged in firing. Weapons must be pointed at the target area.

(6) Green: All vehicles' weapons are clear and elevated. Any live ammunition in the vehicle is properly stowed.

b. Once a firing vehicle begins a battle run and passes the start fire line, all weapon systems are considered to be

loaded and ready to fire. Installation commanders may allow the installation range control officer to approve vehicles on a battle run to not display status flags or lights, based on a range control approved risk assessment.

c. When the firing vehicle completes a battle run, the tank commander will ensure the weapon systems have been cleared. The range safety officer or ARSO will check weapons systems before the vehicle moves to the rear off the firing line or out of the maneuver box to a designated position. Proper flags or lights will be displayed to identify the status of the weapons.

d. Tank commanders or range safety officers will ensure the weapon systems are aligned within the envelope of the vehicle's width when traveling off range onto roadways or tank trails unless previously coordinated with range control for purposes of tactical road marches.

12–9. Close support of ground personnel in live-fire exercises

a. Firing overhead of unprotected personnel by tanks, Bradley fighting vehicles, and CEV main gun is prohibited.

b. Tank, Bradley, M551, and CEV main guns may be used to provide flanking fire if unprotected personnel remain out of the SDZ. Area *A* may be eliminated when firing practice ammunition with inert practice projectiles. The exceptions are spotting charges or discarding sabot projectiles. When HE projectiles are fired, the normal SDZ separation will be required.

Chapter 13
Aviation Gunnery

13–1. Firing operations, general requirements

a. Qualified standardization instructor pilots or instructor pilots having immediate access to positive control of the aircraft and weapon systems being fired will accompany pilots and gunners who are not qualified and current in the aircraft during firing . Qualified nonrated crewmember flight instructors or nonrated crewmember standardization instructors having immediate access to the weapons systems being fired will accompany door gunners who are not current and qualified.

b. Pilots and gunners are qualified when they—

(1) Successfully complete an approved qualification course, or qualification or transition training in accordance with an approved program of instruction.

(2) Demonstrate flight and weapon systems proficiency in accordance with TC 1–210, FM 1–140, and the appropriate aircrew training manual.

c. Pilots and gunners will be familiar with the impact area, firing limits, SDZs, and safety regulations for the range on which they will fire.

d. The firing aircraft pilot in command will ensure that firing aircraft are properly oriented with SDZs and are safe to fire. Command and control aircraft may be used at the commander's discretion.

e. Communications will be maintained between the OIC and the installation range control office. All firing elements must maintain positive two-way communications with the OIC. Firing will be suspended immediately upon loss of communications with range control, the OIC, or firing elements.

f. Airspace routing used by armed aircraft flying from the ammunition loading site to the firing range and return will be plotted on a map or chart and maintained by both the using unit and the installation range control office. This course will be selected so that accidental firing at any point on the course will minimize risk to life and property.

g. Crash rescue personnel will be knowledgeable of safety precautions associated with armed aircraft and impact areas and the hazards associated with burned aircraft (for example, radioactive and advanced composite materials).

13–2. Firing conditions, general procedures

a. Commanders will develop and implement an aggressive program to ensure crew coordination and target identification procedures concurrent with the gunnery training program.

b. Aircraft weapon systems will be loaded or unloaded only in approved areas. Selection of these areas will ensure total containment in the event of accidental discharge. The weapon systems dispersion angle and maximum range will be considered if natural or manmade barriers are not used.

c. The master arm switch will be placed in the safe position before leaving any firing position. Prior to leaving a range area, firing aircraft will be inspected to ensure that no ammunition remains on board the aircraft. The PC will ensure that all weapon systems are clear of ammunition, and placed on safe prior to departing the range. For fixed-wing aircraft, weapons systems will be safe in accordance with the aircraft TM before leaving the range.

d. When training requirements dictate, commanders (battalion, squadron, or higher) may direct the loading and unloading of ammunition from aircraft while the engines are running. Such operations are authorized when a thorough risk assessment has been conducted, control measures implemented and residual risks identified and accepted by the appropriate commander.

e. When conducting running fires, ground markers are required for the start and cease fire lines. Hover fire requires marking of the firing position. Markers may be illuminated and thermalized when thermal weapons sights are used to ensure proper target area identification at times of limited visibility. Additional ground markings may be used at the discretion of the commanding officer or the range OIC. Natural or manmade features may be used to aid in the establishment of range boundaries and control measures.

f. Installation SOPs and range directives will designate emergency landing areas for use by aircraft experiencing weapons malfunctions or inflight emergencies.

g. Fuel spill materials (spill kits) will be on site at each refuel area or forward area rearm and refuel point. Fuel tankers used to refuel aircraft will be equipped with sufficient absorbent material to handle small to moderate spills.

13–3. Gunnery operations

a. Door gunnery operations will be conducted according to the appropriate gunnery manuals (FM 1–140 for Army). Marine Corps will follow the procedures established in Marine Aviation Weapons and Tactics Squadron One (MAWTS–1) Aerial Gunnery Manual and appropriate TM (NWP 55–9–XX) for the specific type aircraft.

b. All personnel on the aircraft when firing weapons will wear at least single hearing protection.

13–4. Surface danger zones

a. General.

(1) For firing from a hover, SDZs will be superimposed over the GTL at each firing point. On running fire courses, SDZs will be superimposed over each anticipated firing position along the course. These SDZs will begin at the start fire line and move along the course to each anticipated firing point to the cease-fire line.

(2) A range may contain several different hover fire points or running fire courses where multiple aircraft can fire at the same time. The resultant SDZ will be a composite formed by individual SDZs. When multiple aircraft are firing at the same time, controls will be established to ensure the safety of all participating aircraft.

(3) SDZ requirements for safe firing of 7.62-mm, .50-caliber machineguns, and 20-mm and 30-mm cannons from rotary-wing aircraft are given in chapter 6 and appendix B. SDZ requirements for 40-mm grenade launchers are provided in chapter 7.

(4) The lateral limits of the target area determine the left and right limits of fire, which may begin at any point beyond the start-fire line provided the minimum safe distance (for example, ricochet areas *A*, *B*, and so forth) for the weapon system being fired is maintained from the aircraft to the point of impact. For running fire, distance *X* will be measured from the cease-fire line.

b. Rockets.

(1) SDZ requirements for the safe firing of the 2.75-infolding fin aerial rocket weapon systems from rotary-wing aircraft for hover and running fire are given in table 13–1, and figures 13–1 and 13–2 are the basis for constructing the SDZ.

Table 13–1
~~Aerial rocketry surface danger zone criteria, in meters~~

	~~Distance X~~					
~~Launch angle~~	~~K40 Rockets~~	~~Hover 90 knots~~	~~K66 Rockets~~	~~Hover 90 knots~~	~~Rockets (PS)~~	~~Hover 90 knots~~
~~0°~~	~~3,000~~	~~3,000~~	~~3,000~~	~~3,000~~	~~N/A[1]~~	~~N/A[1]~~
~~2°~~	~~3,000~~	~~3,700~~	~~3,000~~	~~4,500~~	~~N/A[1]~~	~~N/A[1]~~
~~4°~~	~~3,600~~	~~4,600~~	~~3,800~~	~~5,600~~	~~N/A[1]~~	~~N/A[1]~~
~~6°~~	~~5,000~~	~~5,300~~	~~5,400~~	~~6,400~~	~~N/A[1]~~	~~N/A[1]~~
~~8°~~	~~5,600~~	~~5,900~~	~~6,100~~	~~7,000~~	~~N/A[1]~~	~~N/A[1]~~
~~10°~~	~~6,100~~	~~6,400~~	~~6,700~~	~~7,500~~	~~6,800~~	~~7,600~~
~~12°~~	~~6,500~~	~~6,800~~	~~7,200~~	~~7,900~~	~~7,300~~	~~8,000~~
~~14°~~	~~6,800~~	~~7,100~~	~~7,600~~	~~8,200~~	~~7,700~~	~~8,300~~
~~16°~~	~~7,100~~	~~7,400~~	~~7,800~~	~~8,600~~	~~7,900~~	~~8,700~~
~~18°~~	~~7,300~~	~~7,600~~	~~8,000~~	~~8,700~~	~~8,100~~	~~8,800~~
~~20°~~	~~7,500~~	~~7,800~~	~~8,300~~	~~8,900~~	~~8,400~~	~~9,000~~
~~22°~~	~~7,700~~	~~8,000~~	~~8,500~~	~~9,100~~	~~8,600~~	~~9,200~~
~~24°~~	~~7,900~~	~~8,200~~	~~8,700~~	~~9,200~~	~~8,800~~	~~9,300~~

~~**Table 13–1**~~
~~**Aerial rocketry surface danger zone criteria, in meters—Continued**~~

	~~**Distance *X***~~					
~~**Launch angle**~~	~~**K40 Rockets**~~	~~**Hover 90 knots**~~	~~**K66 Rockets**~~	~~**Hover 90 knots**~~	~~**Rockets (PS)**~~	~~**Hover 90 knots**~~
~~26°~~	~~8,000~~	~~8,300~~	~~8,900~~	~~9,300~~	~~9,000~~	~~9,400~~
~~28°~~	~~8,300~~	~~8,400~~	~~9,000~~	~~9,400~~	~~9,100~~	~~9,500~~
~~30°~~	~~8,500~~	~~8,500~~	~~9,100~~	~~9,500~~	~~9,200~~	~~9,600~~

~~Notes:~~
~~[1] Not applicable. Launch angles below 10° are inadequate for proper aiming. Rockets will impact short of target.~~
~~[2] Launch angles between 20° and 30° are not recommended as they exceed 6,000 m range to target and result in undesirable aircraft attitude.~~

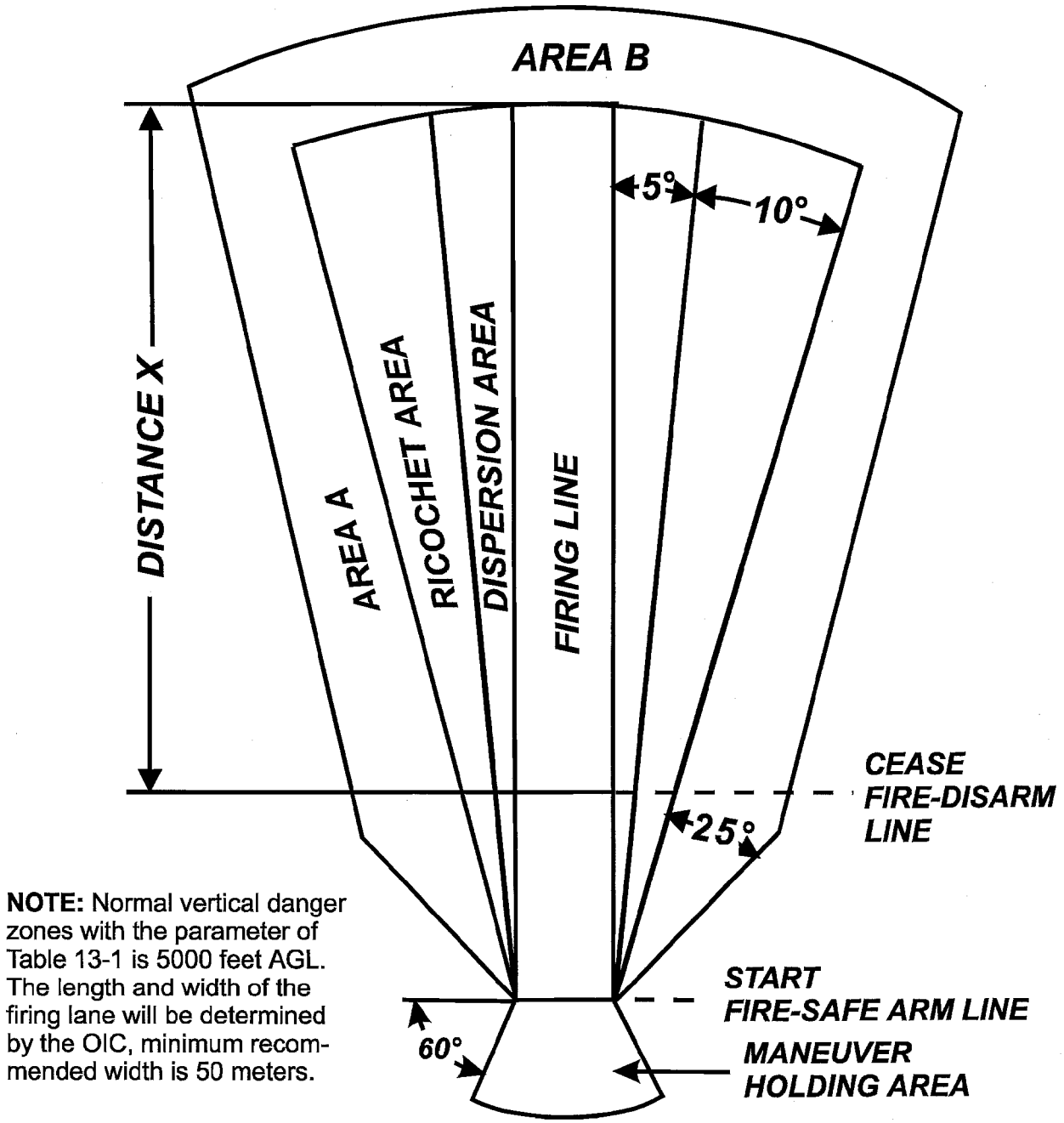

Figure 13–1. SDZ for firing aerial rocketry at ground targets

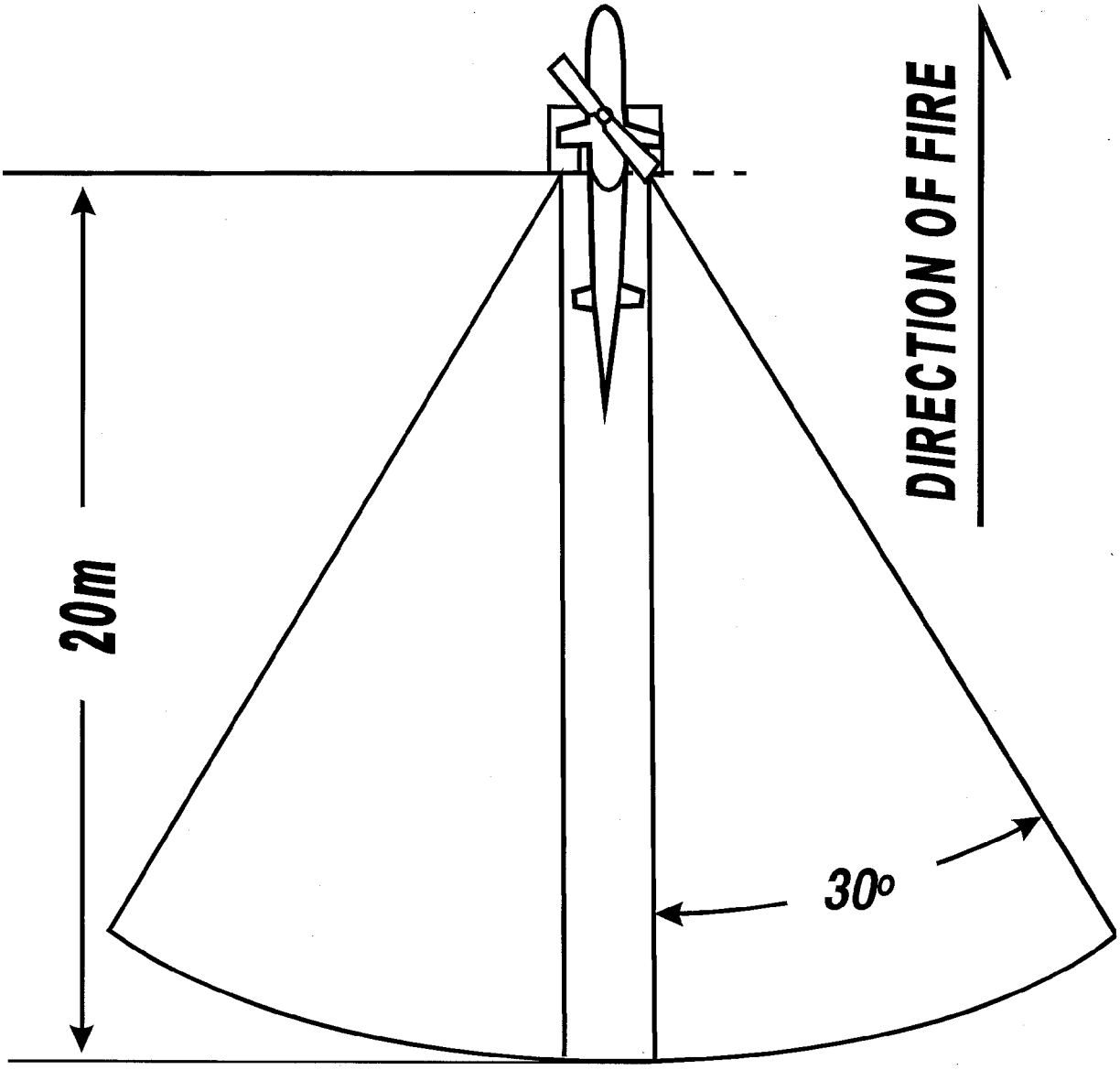

Figure 13–2. Rear blast area for hover firing and loading or unloading aerial rockets

(2) The distance from the cease-fire line or disarm line to the near edge of area *B* will be distance *X* for the weapon system being fired.

(3) Training operations conducted in conjunction with aerial rocket firing will be suspended if winds or gusts exceed 30 knots.

(4) For aerial rockets, the launch angle in degrees equals launcher QE in mils divided by 17.7 plus the aircraft pitch in degrees. For articulating launchers, use the maximum articulated QE possible plus the aircraft pitch in degrees.

(5) Maximum launcher QE will not exceed 160 mils.

(6) Areas *A* and *B* for HE warhead equipped rockets are 300 m wide.

(7) Maximum range of the 2.75-in rocket with the MK40 motor is 9,000 m launched at 45° and below standard air density.

(8) Maximum range of the 2.75-in rocket with the MK66 motor is 12,000 m launched at 45 degrees and below standard air density.

(9) For mixed loads, distance *X* is based on the rocket having the greatest range for the highest expected launch angle.

(10) Firing of M267, multipurpose submunition practice rocket is prohibited if crosswinds exceed 20 knots. The M75 practice submunition may be either inert or have an explosive spotting charge. Inert M75 submunitions are painted blue and have no ram air decelerator. M75 submunitions with explosive spotting charges are painted blue with a brown band and have bright yellow ram air decelerator. The dud M75 has a clean underside. The functioned M75 has soot and burn marks on the underside of the submunition body. An armed M231 fuze for the M75 is identified by a slider that protrudes from the submunition body by about 1.3 cm. This slider has a red tip and a "V" notch.

(11) Firing of M261 HE multipurpose submunition rockets is prohibited in training (Army only).

c. SDZ and firing conditions. For tube-launched, optically tracked, wire-guided (TOW) antitank guided missiles contained in chapter 15, these apply to basic TOW, improved TOW, and TOW 2A missiles fired from U.S. Army and Marine Corps helicopters.

13–5. HELLFIRE antitank guided missile (semiactive laser)

a. Because of the large SDZs and the limited range of the designators, it may be necessary to place designator operators within HELLFIRE SDZs during training operations. Remote laser designation will take place from a position at least 150 m laterally from the launch aircraft to target line, while adhering to the designator zone requirements. Three designator zones have been established within the SDZs and are depicted in figures 13–3, 13–4, and 13–5.

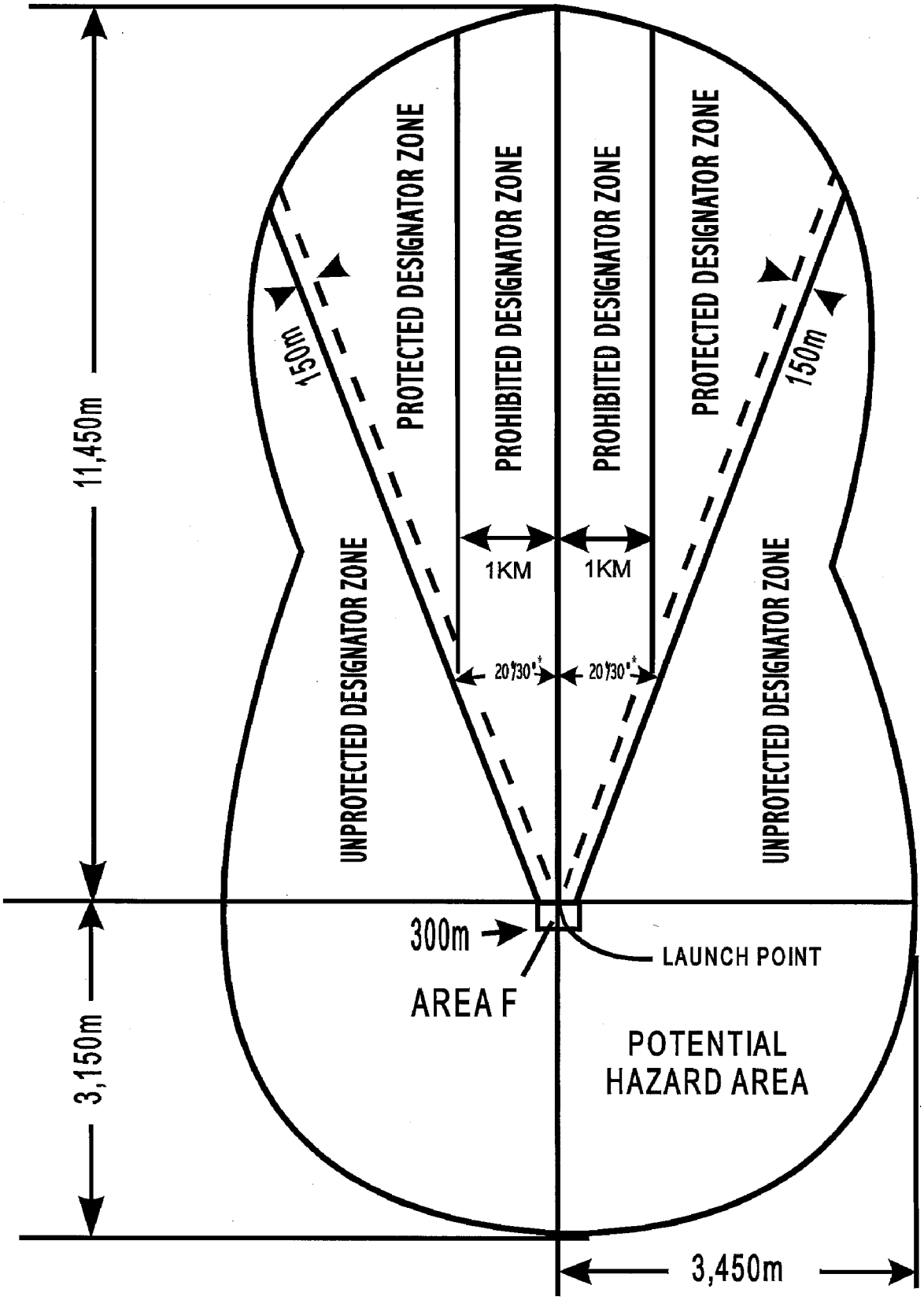

*When firing in a lock-on-after launch, 30° angle will be used.

Figure 13–3. SDZ for firing HELLFIRE laser-guided missile in direct launch at fixed target (lock-on after launch autonomous or lock-on before launch with remote designation)

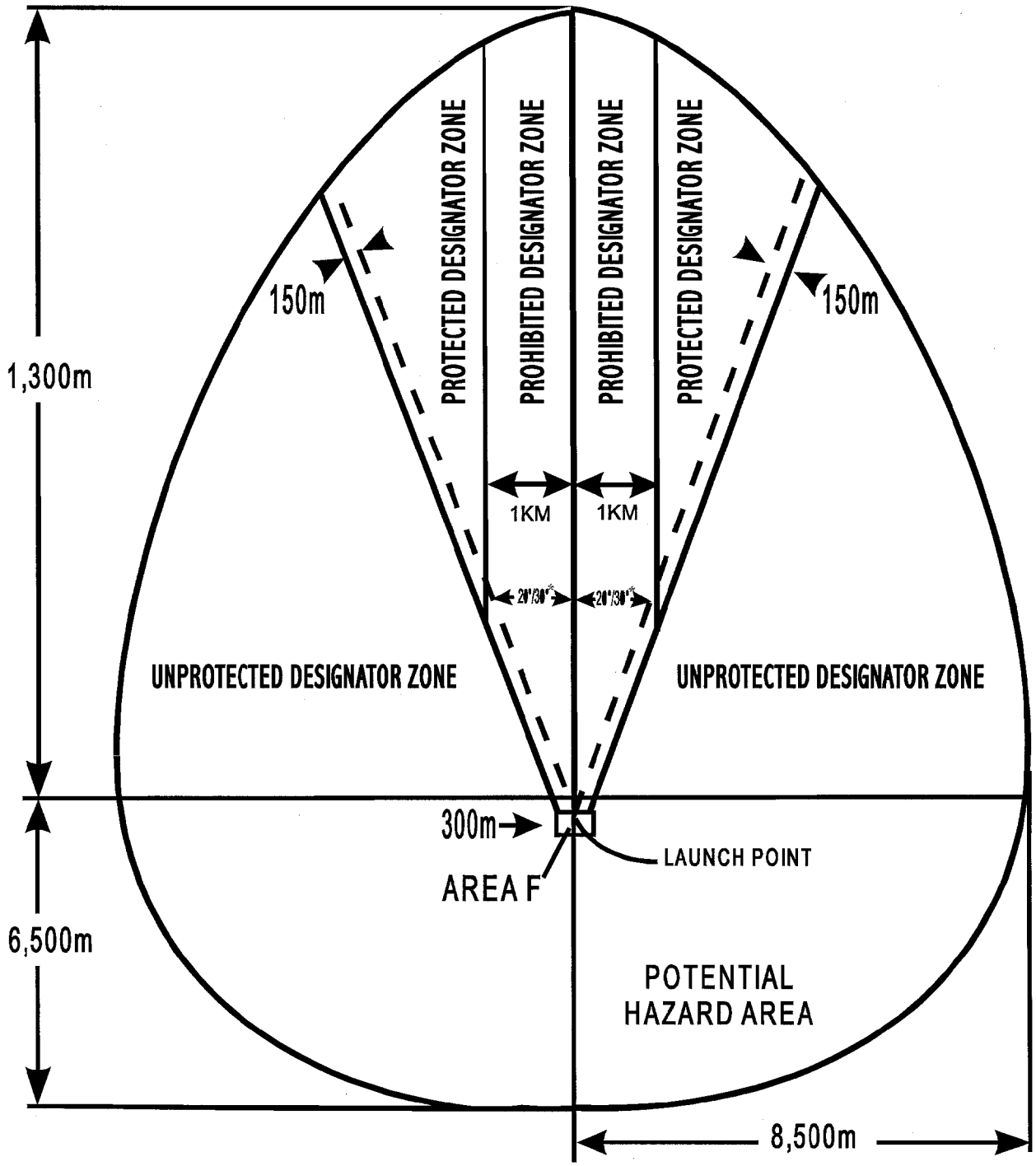

*When firing in a lock-on-after launch, 30° angle will be used.

Figure 13–4. SDZ for firing HELLFIRE laser-guided missile in the indirect launch (lock-on after launch with remote designation) at fixed target

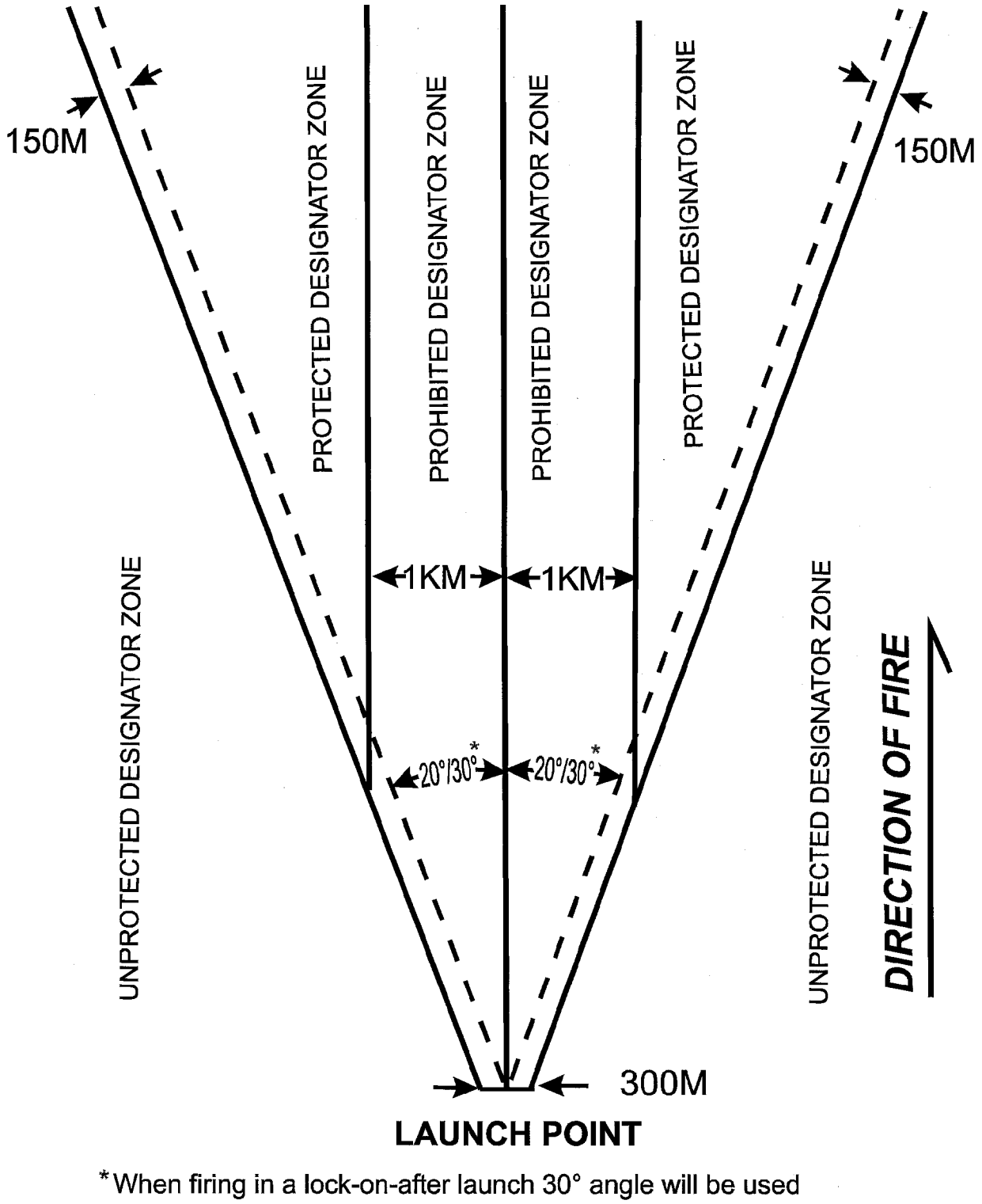

*When firing in a lock-on-after launch 30° angle will be used

Figure 13–5. Designator zones for use with HELLFIRE laser-guided missile SDZ

(1) *Prohibited designator zone* . No designator operators are allowed in this zone because of the unacceptable probabilities associated with the following hazards.

(a) The missile seeker can track the laser backscatter energy at the exit aperture of the designator or along the path of the laser beam.

(b) The probability of random missile failures is the highest within this zone.

(2) *Protected designator zone.* Designator operators are not vulnerable to a normally functioning missile tracking the laser backscatter energy in this zone. However, there is a possibility that the missile may track and impact an obstruction, such as trees, grass, or hills near the designator operator if accidentally illuminated by the laser beam. There is a possibility of a random missile failure impacting within 150 m of a designator operator in this area. Therefore, the number of personnel in this area must be kept to a minimum consistent with mission requirements.

(a) Only ground designator operators may occupy the protected designator zone. Ground designator operators will wear approved flak jackets, protective helmets, and laser eye protection, and be located in protected positions, such as sand bags enclosing the designator operator.

(b) The designator will have a clear unobstructed line of sight to the target. Ensure designator line of sight is unobstructed across the entire path of a moving target during the time of missile flight to impact.

(c) Ground designator operators must ensure that they do not inadvertently lase through battlefield obscurants such as smoke, obstacles, or dust caused by other personnel, vehicles, and so forth.

(3) *Unprotected designator zone.* Although designator operators are not vulnerable to a normally functioning missile tracking backscatter or false targets in this zone, there is still a possibility of being injured by a random missile failure. The unprotected designator zone is illustrated in figures 13–3, 13–4, and 13–5.

(a) As a minimum, ground designator operators will wear approved flak jackets, protective helmets, and laser eye protection.

(b) Airborne designator operators must ensure that they are either over ground conditions that do not create dust or are at an altitude where rotor downwash does not create dust.

(c) Ensure designator line of sight is unobstructed across the entire path of a moving target during the time of missile flight to impact.

b. The angle formed between the designator target line and the missile target line will never be greater than 60°. (See fig 13–6.) Designator operators will be inside this 60° angle.

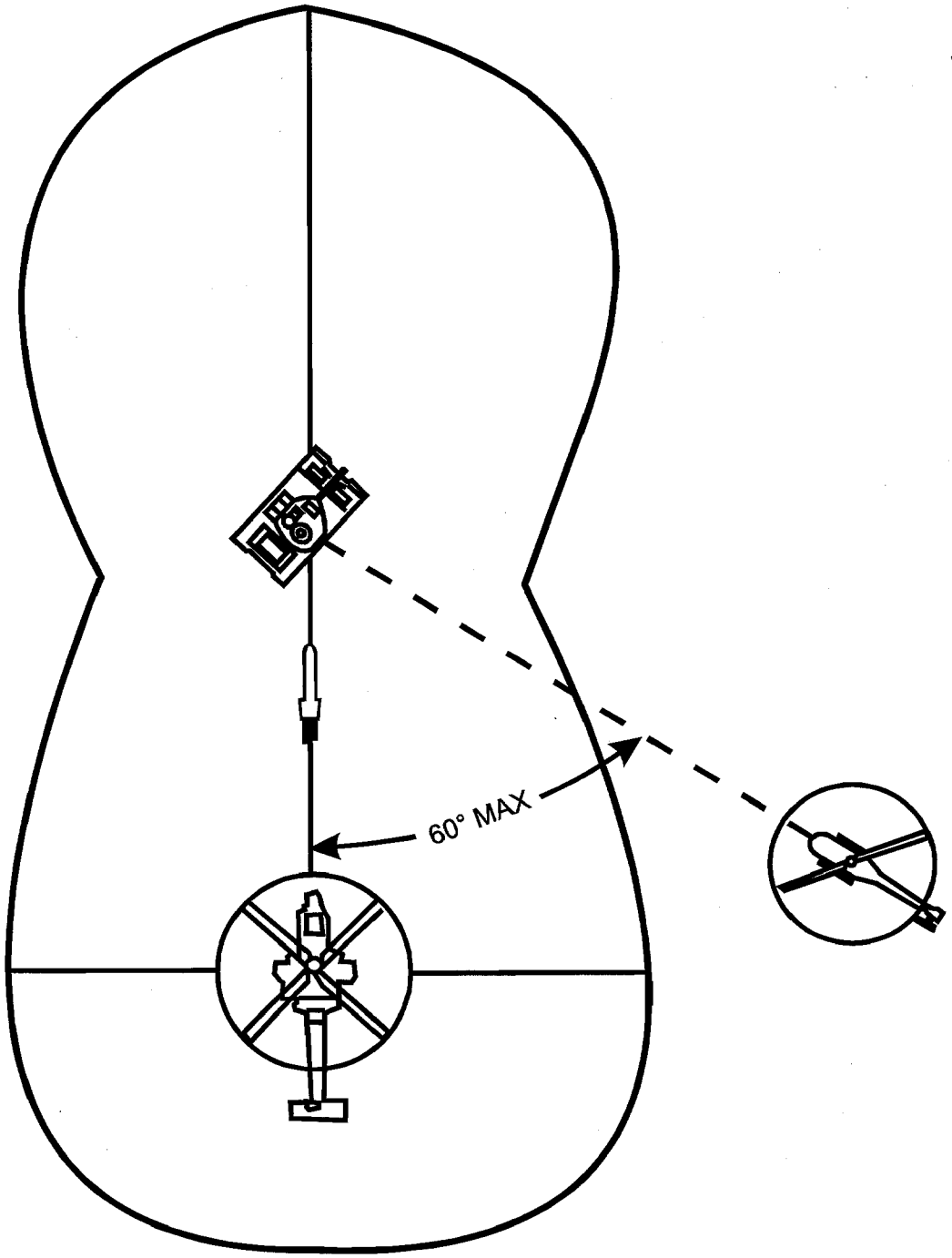

NOTE: The angle between the designator target line and the missile target line shall never be greater than 60 degrees.

Figure 13–6. Maximum designation angle for HELLFIRE missile laser designators

c. The potential hazard area in figures 13–3 and 13–4 identify missile fly-out zone of greater than 10^{-6} probability.

d. Firing conditions for all nonmission essential personnel will be located outside HELLFIRE missile surface danger zones.

(1) The position of the launch platform and designator operators is critical to the safe use of the HELLFIRE missile weapon system. Controls must be established to ensure proper launcher direction, designator direction, designator boresight, and target coordinate verification prior to missile launch.

(2) If the lock-on-after launch (direct fire mode) is required, the target should be visible to the launch crew to assure proper aircraft alignment.

(3) Ground designator rain hood and port covers should always be used when supplied as a system option to reduce clear air laser energy backscatter (reflected laser energy) emitted from the designator toward the missile.

e. HELLFIRE SDZs are based on a helicopter hovering at 10 meters above ground level. The target is on the same plane as the helicopter.

(1) Two SDZs (direct fire and indirect fire) are provided for the HELLFIRE missile (see figures 13–3 and 13–4) for firing at fixed targets, to include the effects of warhead functioning at the edge of the impact area (150 m for areas *A* and *B*), because the HELLFIRE missile has no practice warhead. Because of the unique shape and size of the SDZs, the actual scaled (1:50,000) safety fans should be requested from the respective MACOM safety office.

(a) Direct fire zone . (See fig 13–3.) This zone may be used only with the following launch modes and conditions:

1. Lock-on before launch with remote designation.

2. Lock-on after launch (direct launch mode) with remote designation.

3. Lock-on after launch (direct launch mode) with autonomous designation delayed a minimum of 3 seconds and a maximum of 5 seconds for the AGM–114B/C/F missiles from missile separation. The minimum designation delay for the AGM–114A missiles will be 3 seconds with a maximum of 10 seconds from missile separation. The minimum delay will apply independent of target range. The maximum delay is dependent upon target range as described in FM 1–140, but will not exceed the maximum times specified herein.

(b) Indirect fire zone. (See fig 13–4.) This zone may be used with any HELLFIRE missile operational mode described in paragraph 13–6a(1) and with either remote or autonomous designation. The HELLFIRE operational mode launch parameters and performance envelopes are described in FM 1–140. Firings of the AGM 114 K/M missiles are restricted to the indirect fire SDZ.

(2) Laser SDZ parameters outlined in MIL–HDBK–828 apply to designators being used with HELLFIRE missiles.

(3) Area *F* is an area to the rear of the launch point 30 m wide (15 m to each side of the launcher) and 50 m long. Hazards are launch motor blast, hazardous noise levels, overpressure, and debris. Serious casualties or fatalities may occur to personnel occupying area *F*; therefore, occupation of it is prohibited.

13–6. Stinger guided missile

Stinger guided missile requirements apply to both air-to-air and ground-to-air launched missiles. Refer to chapter 14, paragraph 14–5, for the SDZ information.

Chapter 14
Air Defense Artillery Weapon Systems

14–1. General

a. SOP will be established to prevent accidents during the firing of guided missiles and rockets. The SOP will—

(1) Expand the specific duties and responsibilities of the range OIC, RSO, and trajectory officer (if appropriate).

(2) Relate to the special characteristics of the specific missile or rocket to be fired and the physical characteristics of the firing area.

(3) Specify procedures for conducting operations involving the use of high-pressure air (or compressed gases). Well-trained and qualified personnel will supervise such operations.

b. Changes in the type of missile or rocket to be fired or changes in local conditions make it mandatory that the SOP be revised or a new SOP prepared prior to firing.

14–2. Firing conditions, general requirements

a. The following safety precautions will be observed for firing guided missiles and heavy rockets.

(1) The number of personnel engaged in handling, assembling, or firing guided missiles and heavy rockets will be kept to the minimum required to maintain efficient operations and mission accomplishment.

(2) Shorting plugs and other safety devices will be removed only to conduct tests or in final preparation for firing.

(3) Smoking is prohibited at firing pads, ready storage sites, and assembly sites. No-smoking signs will be prominently displayed. Smoking is also prohibited on any vehicle used to transport propellants or explosives. The possession of matches or any other flame producing devices while working with or transporting propellants or explosives is prohibited.

(4) Suitable firefighting equipment as determined by the installation fire marshal will be readily available during all firings.

(5) Personnel engaged in handling hazardous materials or exposed to hazardous operations or conditions will use protective clothing and equipment, as prescribed by appropriate TMs and FMs. Approved hearing protection will be worn by all personnel within the hearing hazard zones defined in the manuals for each system.

(6) Except for the use of approved testing equipment in accordance with established procedures, guided missiles and heavy rockets will be isolated from sources of electrical energy (sparks, static discharges, or stray current) that may cause ignition of the propellant or electro-explosive devices.

(7) Decontamination equipment appropriate for the type of propellants, oxidizers, active chemicals, batteries, or hazardous fuels at the site will be readily available during firing operations.

b. Firing and support personnel will not occupy positions within any portion of the SDZ except as specifically authorized by this pamphlet.

c. When occupation of the SDZ is authorized, protective shelters will be used which have been inspected by the installation safety director and facility engineer.

d. Fire control personnel will employ positive protection, such as keyed firing panels, to prevent premature firing of a guided missile or heavy rocket.

14–3. Air defense artillery target missiles

a. General safety requirements for air defense artillery target missiles are contained in chapter 5.

b. Special provisions are indicated in the paragraph for each specific weapon system.

14–4. Redeye guided missile (Army)

a. Firing conditions.

(1) The entire Redeye SDZ will be cleared of all personnel except those actively engaged in missile firing. This number will be held to the minimum compatible with efficient operations.

(2) Procedures and precautions in appropriate TMs and FMs will be followed during Redeye missile firings.

(3) No firings will be made on incoming targets that normally pass over the launch area allowing target or target debris to impact in the area upon intercept. Instructors and any other personnel exposed to rocket motor blast will wear personal protection equipment required for the gunner in appropriate TMs.

b. SDZ.

(1) Redeye guided missile SDZ requirements are given in figure 14–1 and consists of an impact area and areas *A*, *B*, and *F*. The SDZ is based on the maximum ballistic range of the Redeye because there is no provision for command destruct by the trajectory safety officer. Distance *X* for the Redeye guided missile is available from the respective MACOM safety office. MACOMs that have Redeye guided missiles get distance *X* from the U.S. Army Aviation and Missile Command.

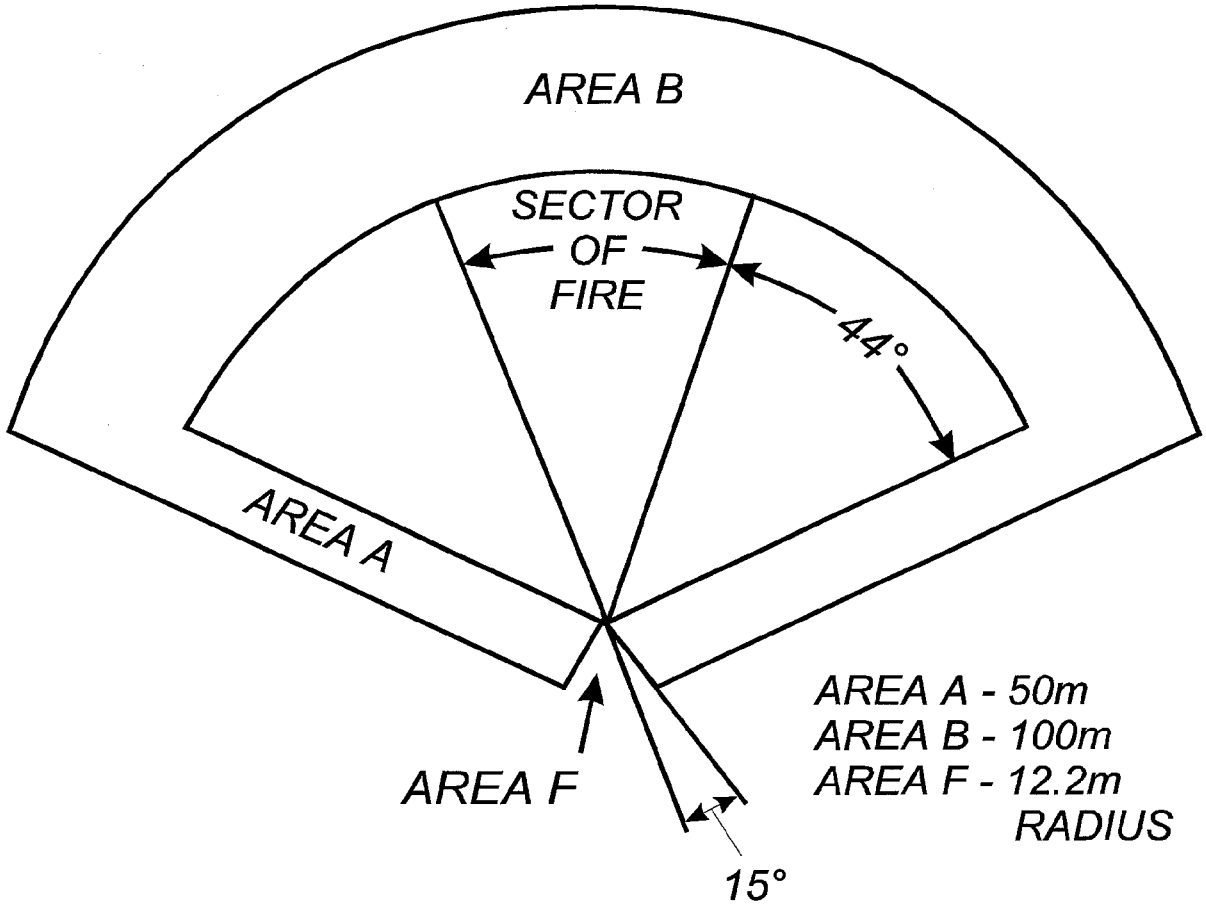

Figure 14–1. SDZ for firing Redeye guided missile at moving targets

(2) Impact areas will normally contain fragments and debris from missiles launched within its sector of fire. The sector of fire is that portion of the impact area in which targets may be engaged. Boundaries of the sector must be designated by positioning azimuth limit markers forward of the launcher position, and all firings must be accomplished within these limit markers. Impact area consists of an area 44° to each side of the sector of fire and extending downrange to the maximum ballistic range of the missile.

(3) Area *A* is the lateral secondary danger zone. This area is normally adequate to contain the effects of warheads functioning at the edge of the impact area. It consists of areas 50 m wide on each side of the impact area and extending downrange to the maximum ballistic range capability of the missile.

(4) Area *B* is the far secondary danger zone. This area is normally adequate to contain the effects of a warhead functioning at the downrange edge of the impact area. It consists of an area 100 m in depth beyond the impact area and area *A*.

(5) Area *F* is the launcher danger zone extending to the rear of the firing position. It consists of an area 15° to the outside of the rearward extension of the sector of fire boundaries, and the area between the rearward extensions of the sector of fire. This angle also defines the rear limit of Area *A*. The rear distance in both cases will be a connecting radius 12.2 m from the launcher.

14–5. Stinger guided missile

a. Firing conditions.

(1) The entire Stinger guided missile SDZ will be cleared of all personnel except those actively engaged in the missile firing. This number will be held to the minimum compatible with efficient operations.

(2) Stinger weapon systems will not be fired over the heads of unprotected personnel because of the hazards from launch motor impact and the sustainer motor plume.

(3) All training firings will be limited to a maximum elevation angle of 50° (40° target elevation angle plus 10° super elevation) to minimize the possibility of a malfunctioning missile traveling to the rear of the launch position.

(4) Procedures and precautions in appropriate TMs and FMs will be followed during Stinger firings. No firings will be made on directly incoming targets that normally pass over the launch area allowing targets or target debris to impact in the area upon intercept. Instructors and any other personnel exposed to the rocket motor blast will wear personal protective equipment as required for the gunner in the appropriate TMs.

b. SDZ.

(1) Stinger guided missile SDZ requirements given in figure 14–2 apply to both air-to-air and ground-to-air launched missiles. This SDZ, based upon maximum ballistic range of the missile, consists of an impact area and areas *A*, *B*, and *F*. Self destruct features designed to terminate missile flight within the SDZ were not considered in establishing range safety requirements. Maximum ballistic range (distance *X*) for Stinger in each launch mode is given below.

(a) Ground-to-air guided missiles.

1. Basic Stinger, 11,900 m.

2. Reprogrammable microprocessor (RMP) Stinger, 13,000 m.

3. RMP block 1 Stinger, 14,000 m.

(b) Air-to-air guided missiles, same as ground to air, except distance *X* increases 0.60 m for every 0.30 m of altitude AGL at time of launch.

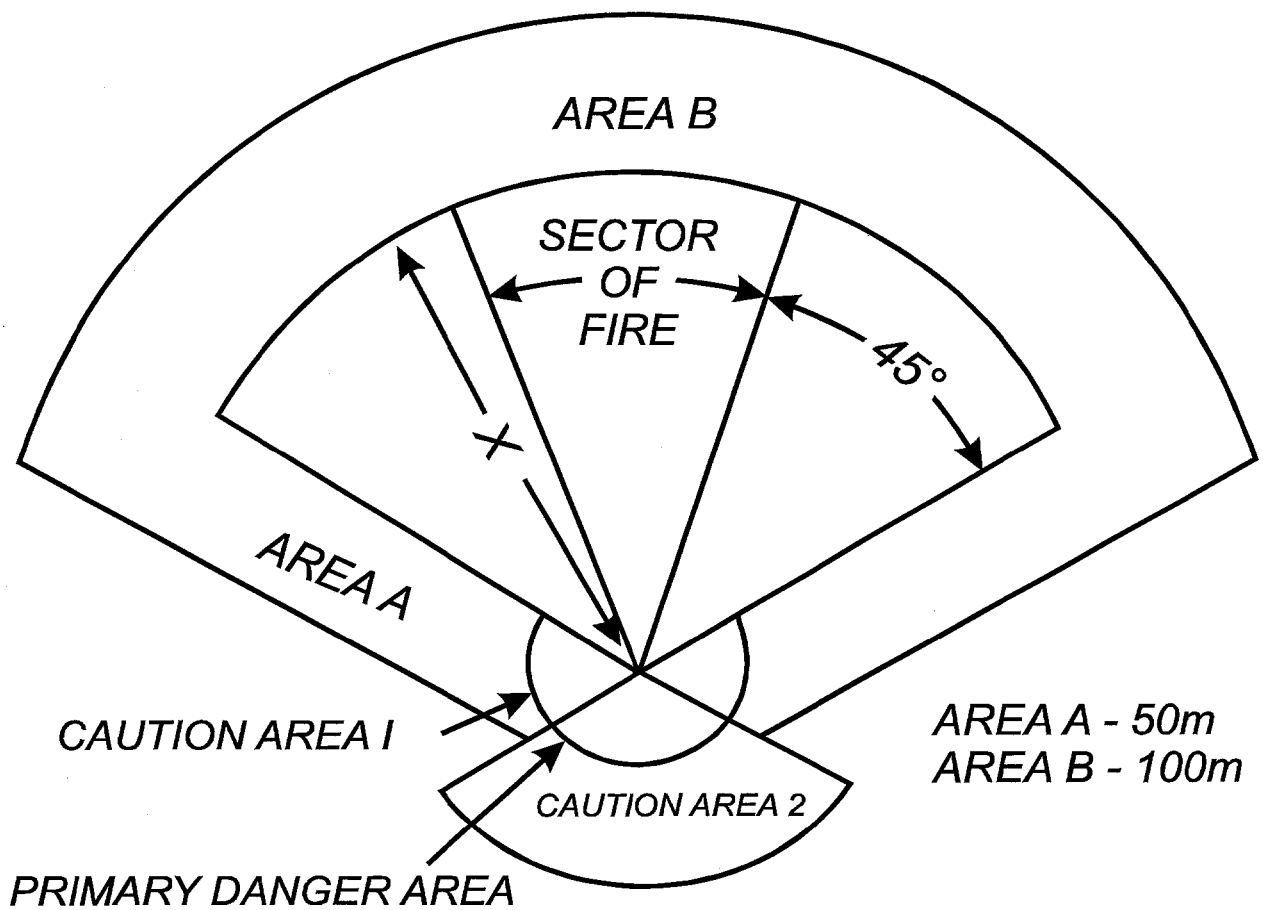

Figure 14–2. SDZ for firing Stinger guided missile at moving targets

(2) Impact areas will normally contain fragments and debris from missiles launched within its sector of fire. The sector of fire is that portion of the impact area in which targets may be engaged. The boundaries of the sector will be designated by positioning azimuth limit markers forward of the launcher position. All firings must be accomplished within these limit markers. The impact area for moving targets consists of an area 45° to each side of the sector of fire and extending downrange to the maximum ballistic range of the missile. For stationary (hovering) and directly outbound moving targets the impact area may be reduced to 40° on each side of the sector of fire.

(3) Area *A* is the lateral secondary danger zone that is adequate to contain the effects of warheads functioning at the edge of the impact area. It consists of areas 50 m wide on each side of the impact area and extending downrange to the maximum ballistic range capability of the missile.

(4) Area *B* is the far secondary danger zone that is adequate to contain the effects of a warhead functioning at the downrange edge of the impact area. It consists of an area 100 m in depth beyond the impact area and Area *A*.

(5) Area *F* shown in figure 14–3 is the launcher danger zone extending to the rear of the firing position. It is further divided into a primary danger area and two caution areas.

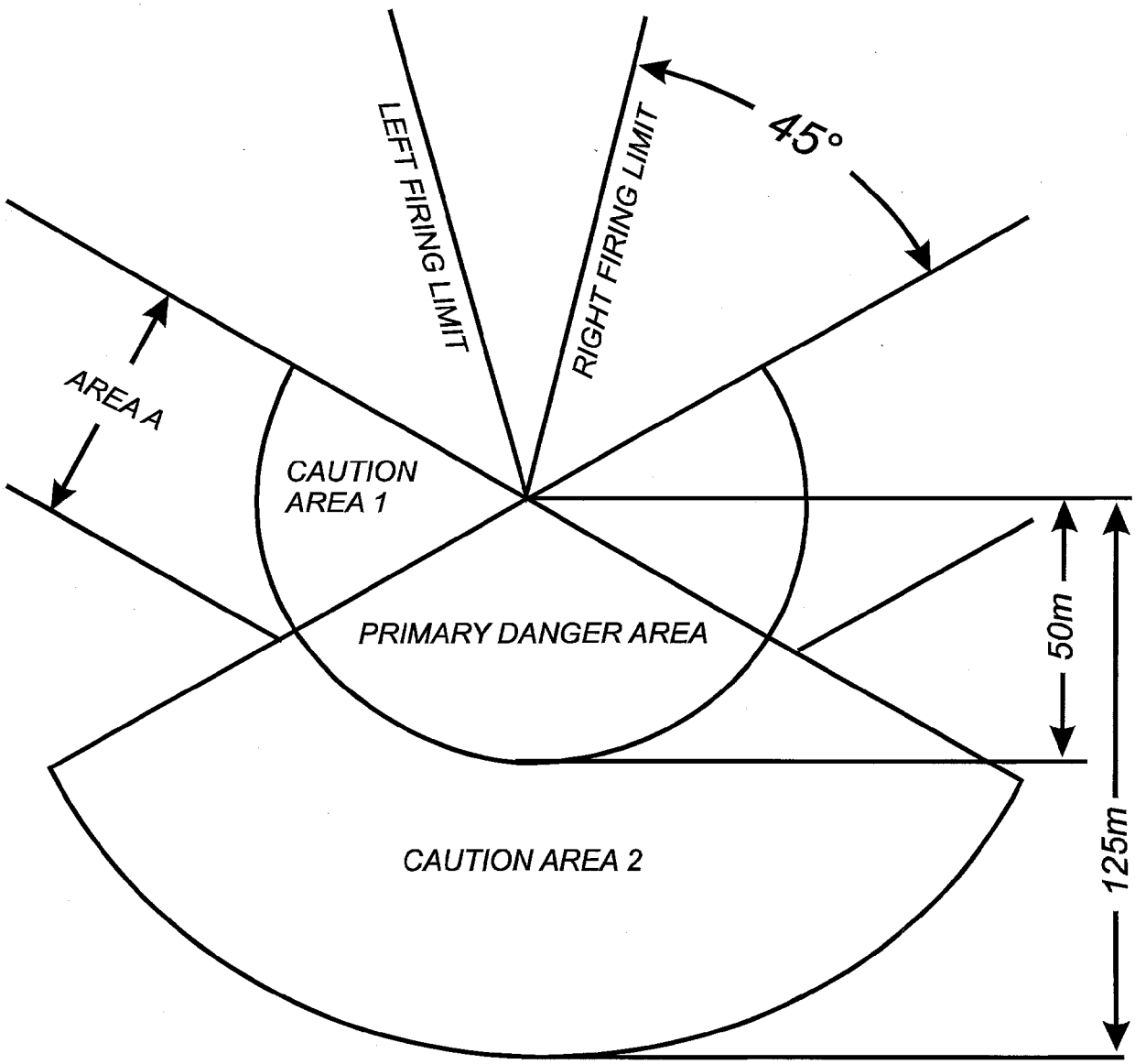

Figure 14–3. SDZ, area *F*, for firing Stinger guided missile

(a) The primary launcher danger area has a radius of 50 m with boundaries that lie along rearward extensions of the impact area boundaries. Personnel are not permitted in this area during firings.

(b) Caution area 1 also has a radius of 50 m. Its boundaries are the primary launcher danger area and the impact area. Any personnel in this area must be protected from hazardous noise levels and flying ground debris.

(c) Caution area 2 extends to the rear of the launcher with a radius of 125 m. Its boundaries are straight lines drawn between the rearward extension of the impact area boundaries and the intersection of the 125-m radius. Personnel in this area are exposed to hazardous noise levels only. Occupation of caution area 2 is permitted when all personnel are wearing approved single hearing protection.

(6) Stinger SDZ does not ensure protection from aerial targets that may be used for training firings. Target SDZs must be incorporated into overall Stinger firing operations by the range safety officer.

c. Stinger SDZ criteria. These apply to Avenger, Linebacker, MANPADS, and LAV launch platforms, both

stationary and on the move. When firing on the move, extend Stinger/Avenger SDZ along the route of maneuver. The target flight path establishes left and right limits of fire.

14–6. Chaparral guided missile

a. Firing conditions.

(1) The entire SDZ will be cleared of all personnel prior to firing a missile except as authorized below.

(2) Procedures and precautions outlined in appropriate Chaparral TMs and FMs will be followed during firings. Only the minimum personnel required to fire and maintain safety surveillance of the firing will be permitted in the SDZ at the time of missile firing. All personnel except the fire unit gunner will occupy appropriate protective shelters which have been located and constructed in accordance with Corps of Engineer drawings and will protect against any fragments or debris that may be expected from the missile as a result of warhead functioning. The protective shelters must be examined by the installation safety director and facility engineer to determine if the shelters will provide adequate personnel protection.

(3) Danger areas for debris from target with normal controlled flights should be contained within the impact area for the Chaparral missile. Impact areas for target vehicles that have abnormal flights or which go out of control are not covered herein.

b. SDZ.

(1) Chaparral SDZ requirements are given in figure 14–4 and consist of an impact area and areas *A*, *B* and *F*. This SDZ is based on the maximum ballistic range of the missile since there is no provision for command destruct by the trajectory safety officer.

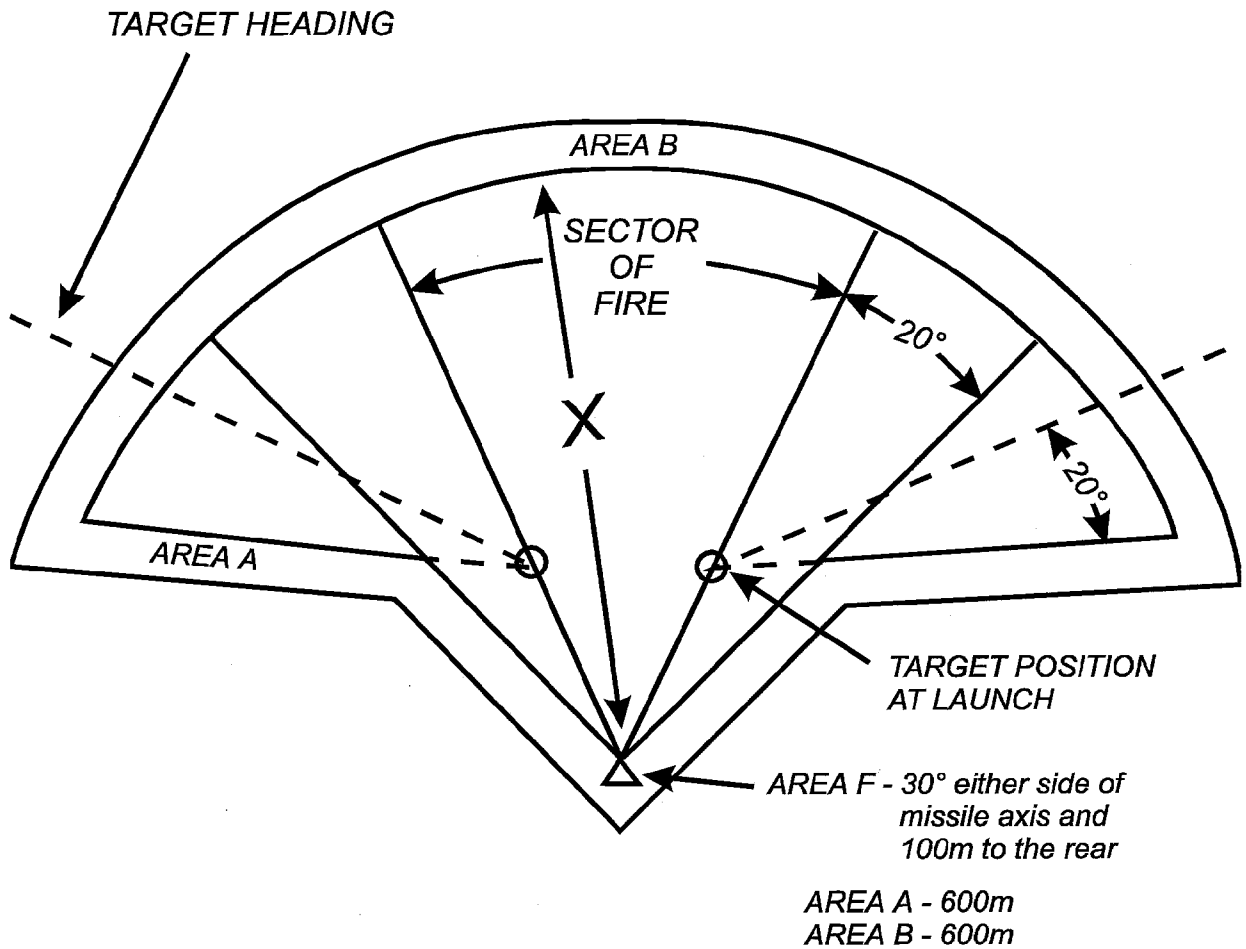

Figure 14–4. SDZ, area *F*, for firing Chaparral guided missile at a point in space

(2) Impact areas, which include the sector of fire and 20° on each side, are used for firings at directly outgoing targets. When firings are made at off tail or crossing targets, the minimum impact area is increased by 20° beyond the heading of the target. The boundaries of the sector of fire must be designated by positioning azimuth limit markers forward of the launcher position. All firings must be accomplished within these limit markers.

(3) Area *A* is the lateral secondary danger zone. This area is normally adequate to contain the effects of warheads functioning at the edge of the impact area. The 600-m width for this area and for area *B* is the distance required for the MK 48 series warheads.

(4) Area *B* is the downrange secondary danger zone. It is normally adequate to contain the effects of a warhead functioning at the forward edge of the impact area.

(5) Area *F* is the back blast area that lies totally within area *A*. Area *F* is defined as an area bounded by lines 30° on each side of the missile axis and extending 100 m to the rear which should adequately contain primary and secondary motor exhaust and debris.

14–7. Patriot guided missile

Patriot service practice and other firings with the Patriot guided missile weapon system conducted at or under the control of White Sands Missile Range or McGregor Range, Fort Bliss, will be in accordance with safety requirements of AR 385–63, this pamphlet, and the training or test range SOPs.

a. Firing conditions.

(1) Patriot guided missile SDZ will be cleared of all personnel prior to firing a missile except as authorized below.

(2) A missile flight corridor drawn on a map or a scale drawing of the firing range is provided for use by the trajectory safety officer. The trajectory safety officer is provided with a means of accurately tracking and plotting the

course of the missile and a means of causing the destruction of the missile if the missile intersects the flight corridor boundary. The flight corridor has lateral boundaries that are parallel to and 2 km closer to the centerline than the lateral boundaries of the impact area. The lateral boundaries of the flight corridor extend to meet the boundary of the impact area beyond the intercept point. Flight corridor boundaries from the launch point intersect the lateral boundaries of the flight corridor at distance *L* from the launch point.

(3) Only those personnel actively engaged in fire and control of the missile as specified by the appropriate TMs and FMs will be permitted in the SDZ at the time the missile is fired. The number of personnel authorized access should be the absolute minimum that is compatible with efficient operation. Personnel should, when possible, occupy shelters that are located a minimum of 90 m from the launcher and approved by the installation safety director.

(4) Danger areas for debris from target drones that have normal flight paths should be contained within the impact area for Patriot guided missiles. Impact areas for target drones that have abnormal flight paths or which go out of control are not covered herein.

b. SDZ.

(1) The SDZ includes an impact area, areas *A* and *B* (see fig 14–5), which represents the areas on the ground that will contain the debris from the Patriot missile that is destroyed in flight. Labels for SDZ areas below are unique to the Patriot guided missile.

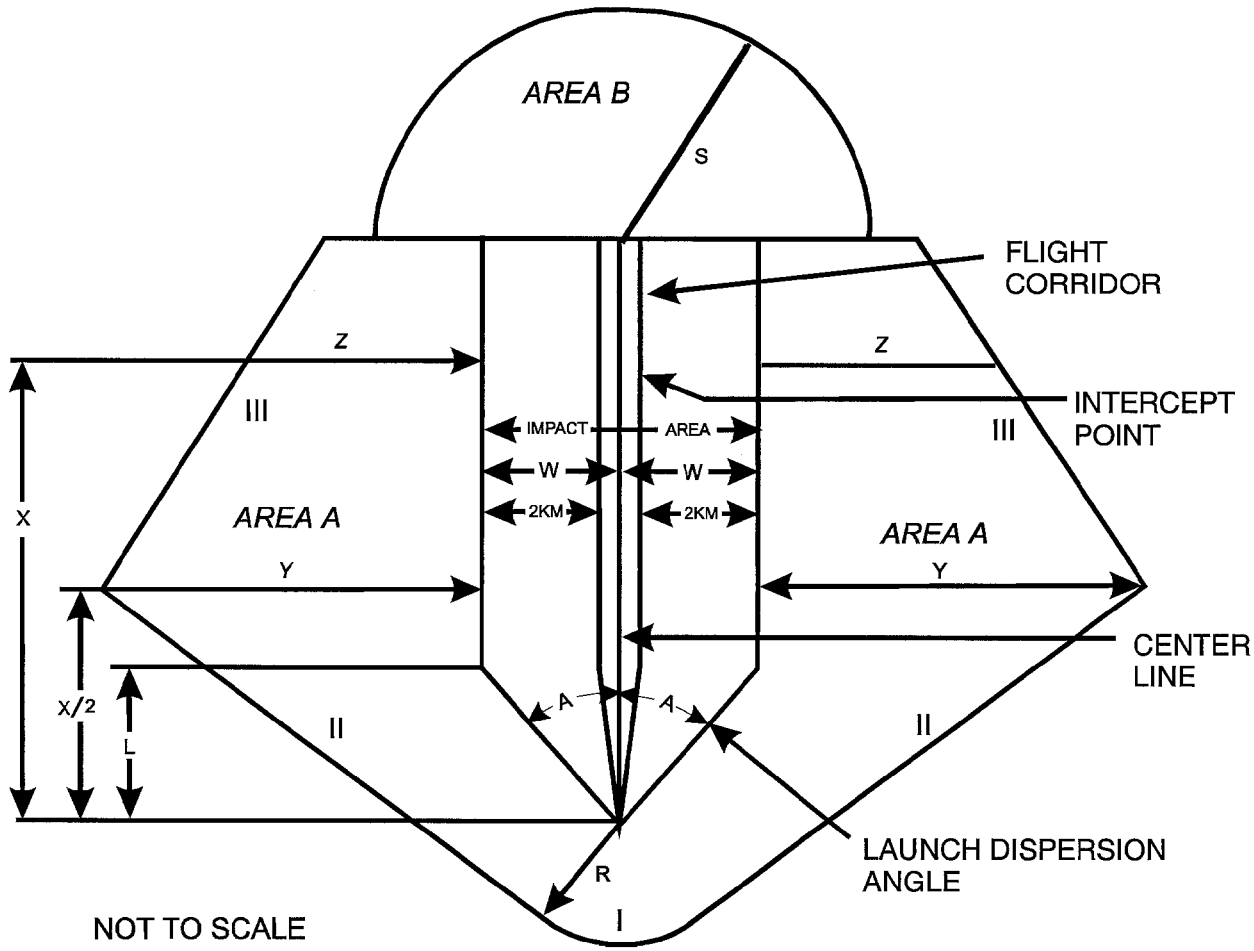

Figure 14–5. SDZ for firing Patriot missile

(2) The impact area is the area on the ground that contains the ground projections of all of the locations where the missile can be destroyed in flight. The boundary of the impact area is defined by the launch dispersion angle (*A*), the cross-range dispersion (*W*), and a line normally (90°) to the centerline located 2 km greater than the intercept range. The azimuth dispersion angle (*A*) is 40° on either side of the centerline. The lines that are drawn at angle *A* from the launch point, intersect cross-range lines drawn parallel to the center line at a downrange distance of *L* meters from the launch point.

(3) Area *A* (lateral secondary buffer zone) is the area on the ground that contains debris from a missile that is destroyed on the lateral boundary of the impact area. Action is taken by the trajectory safety officer to initiate the destruction of the missile when the missile intersects the flight corridor boundary. The debris from the missile follows trajectories that are determined by the kinetic, gravitational, wind, and aerodynamic forces that act on the debris.

(4) Area *B* is the area beyond the intercept point that contains the debris from a missile that passes the intercept point without being destroyed by the fuze functioning. The missile is automatically destroyed within 2.2 seconds after passing the target when the missile is not destroyed by the warhead when the fuze functions. The debris from the missile that is destroyed after passing the intercept point impacts the ground within area *B*. The automatic termination interval varies and is classified as confidential for MIM–104, MIM–104A, MIM–104B and MIM–104C (SOJC).

(5) Distances *Y* and *Z* are based upon missile altitude at detonation and speed of cross winds.

14–8. Improved Hawk guided missile (Army)

a. Firing conditions.

(1) Improved Hawk guided missile SDZ will be cleared of all personnel prior to firing a missile except as authorized below.

(2) The trajectory safety officer must be provided with layouts of the training complex on which the SDZ and trajectory corridor for the particular firing have been defined. The trajectory safety officer must also be provided a means of accurately tracking and plotting the course of a missile during trajectory. Firings normally will be made to a moving aerial target rather than a point in space. In this case, a composite SDZ, which is based on the two extreme azimuth intercept points, will be required. Target azimuth, target elevation, and target velocity will establish the intercept locus (path of moving intercept points). Control of the time interval for launch will establish boundaries for the intercept locus. Figures 14–6 and 14–7 can be used for developing a composite SDZ. Dimensions for area *B* will be as shown in table 14–1. Distance *X* will be based upon the maximum altitude for the predicted intercept point as given in table 14–1. Maximum range for predicted intercept point will establish the inner boundary for area *B* distance *W* must be maintained between the "predicted intercept point" and area *B*.

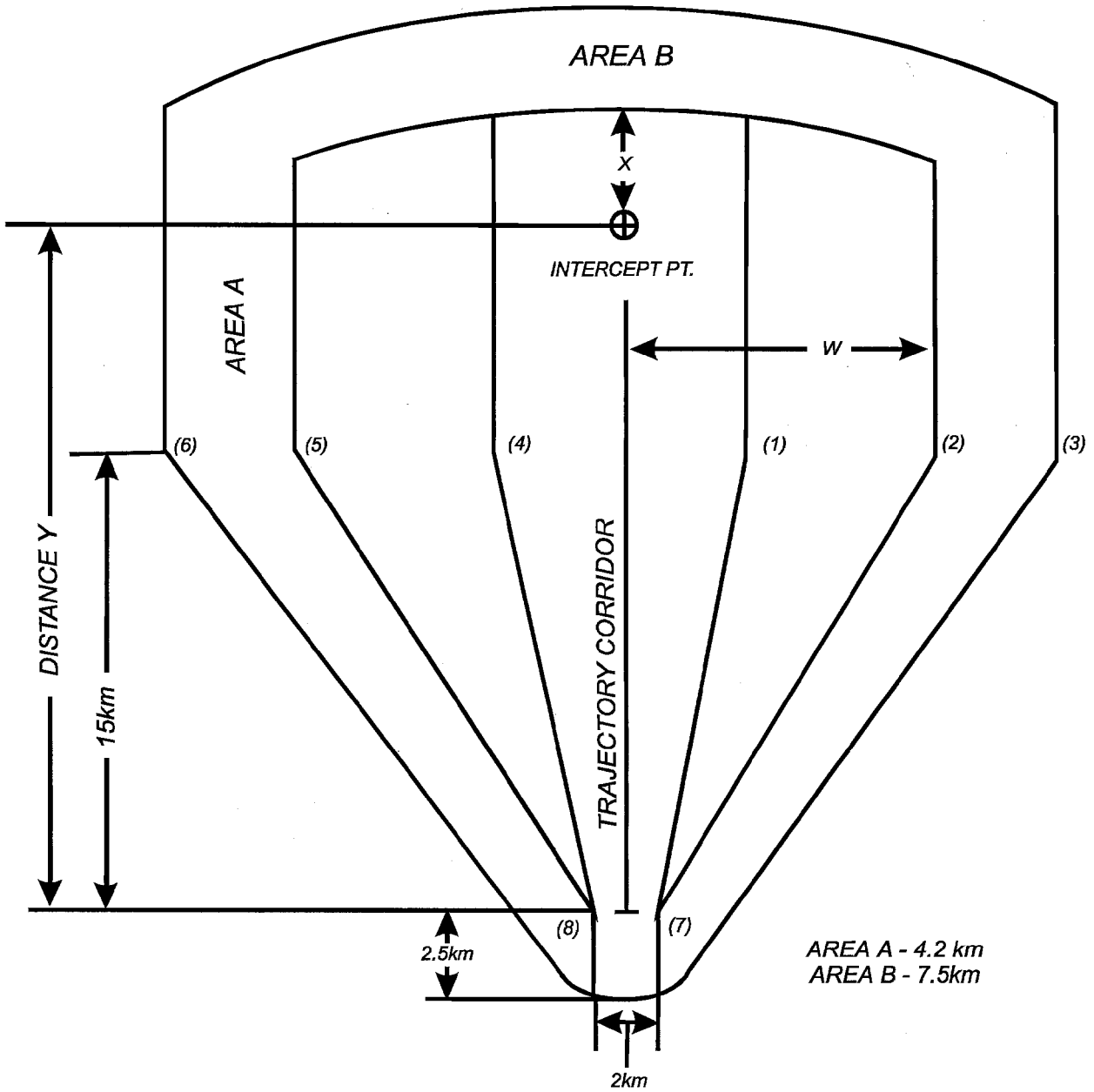

Figure 14–6. SDZ for improved Hawk guided missile firing at a point in space

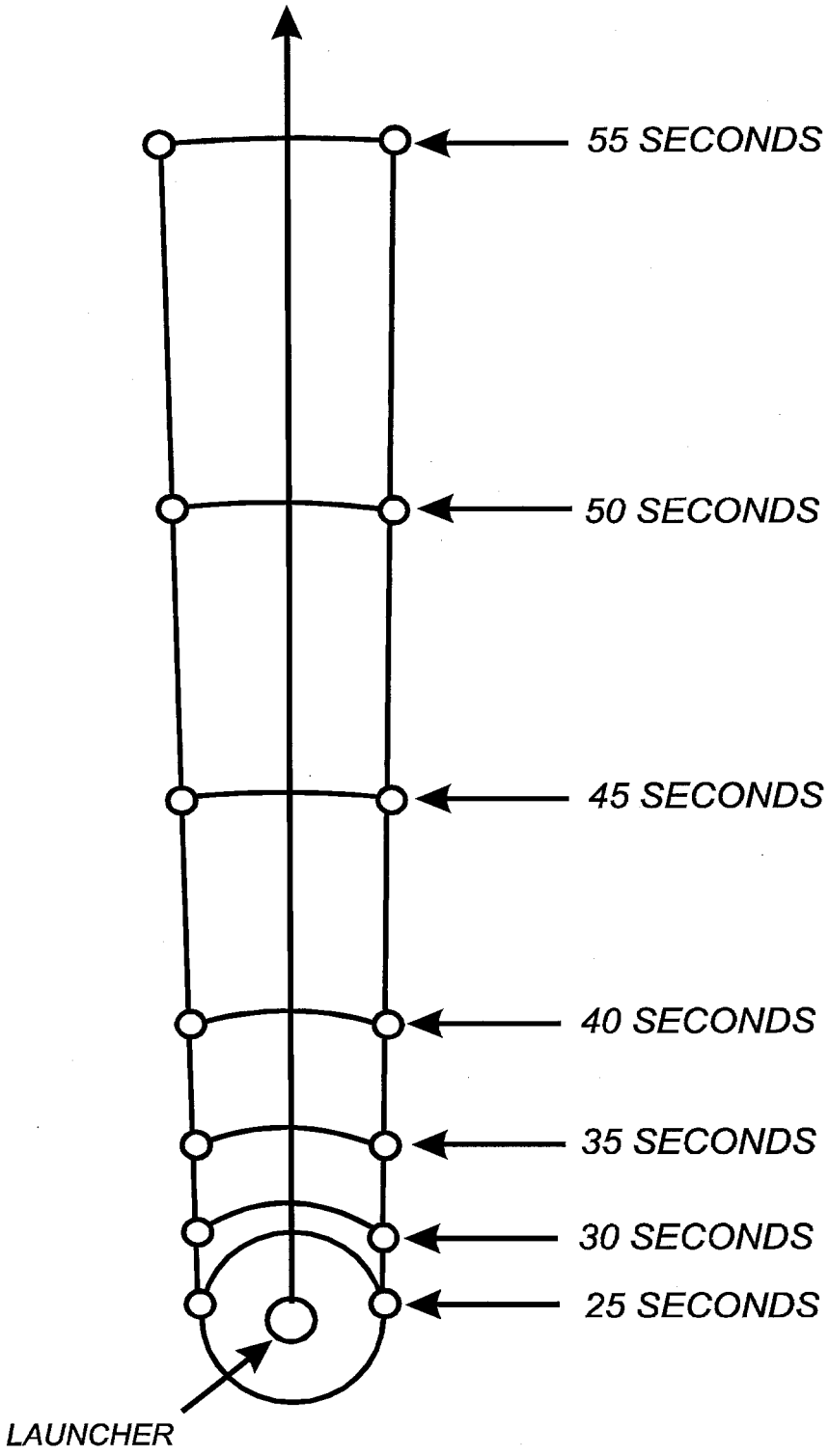

Figure 14–7. Typical trajectory corridor

Table 14–1
Improved Hawk corridor dimensions

Predicted intercept altitude	Distance *W*	Distance *X*	Trajectory corridor
(in feet above ground level)	(in meters)		
Ground level	4,600	610	4,000
10,000	6,000	2,000	4,000
20,000	7,400	3,400	4,000
30,000	8,700	4,700	4,000
40,000	10,200	6,200	4,000
50,000	11,700	7,700	4,000

(3) Only those personnel actively engaged in firing and control of the missile as specified by appropriate TMs and FMs will be permitted in the SDZ at the time of missile firing. The number of personnel thus engaged should be held to an absolute minimum compatible with efficient operation. These personnel should, when possible, occupy appropriate protective shelters that have been located a minimum distance of 61 meters from the launcher and constructed in accordance with approved Corps of Engineers drawings.

(4) Danger areas for debris from target drones which have normal flight paths should be contained within the impact area for the Improved Hawk missile. Areas of impact for target drones which have abnormal flights or which go out of control are not prescribed.

b. SDZ.

(1) SDZ requirements for Improved Hawk guided missile are given in table 14–1 and figure 14–6 and consist of an impact area and areas *A* and *B*. This SDZ is constructed on the basis that the trajectory safety officer may accomplish actual destruction of the missile after 8.5 seconds from the time of firing or 5.5 seconds after leaving the trajectory corridor. Labels for SDZ areas below are unique to the Hawk guided missile.

(2) Impact areas are considered adequate to contain the debris from missiles and the impact of missiles that have a normal flight. Trajectory corridor dimensions (W) include the maximum lateral displacement of the missile due to lead angles and maneuvers associated with intercepting a moving aerial target. The area extends 2,500 m to the rear of and to either side of the firing point, and opens to a varying distance (*W*) at 15,000 m downrange in the direction of fire, to either side of the direction of fire depending on the altitude of the intercept. (See table 14–1.) This area is continued to a distance (*X*) meters beyond the intercept point, and to a distance (*Y*) or (*W*), whichever is larger, to either side of the predicted intercept point. (See table 14–1.) The resulting area is considered adequate for firings to a point in space within the trajectory corridor. Range (distance *Y*) will be the predicted point of ground impact or target intercept and may vary between minimum intercept and maximum ground impact range capability of the missile if the missile can be destroyed upon departure from the predetermined trajectory path by employing techniques which will reliably predict "range to go." Distance *X* must be equal to the maximum ground impact range capability of the missile only when trajectory corridors do not provide for destructive points to control the range as well as azimuth of the missile.

(3) Area *A* is an area 4,200 m wide paralleling the lateral edge of the impact area. This area is normally adequate to contain the debris from missile intercepts, missiles destroyed in trajectory corridors, and the impact of missiles that have an abnormal flight or go out of control and must be destroyed by the trajectory safety officer. Range area to the rear of the firing point is adequate when early prediction of missile trajectory and destruction of the missile can be accomplished in the event the missile is heading in the direction opposite the planned trajectory. The 4,200 m width of area *A* is based on the use of trajectory corridors. If trajectory corridors are not used, the width of area *A* must be increased to 6,500 m to provide time for the trajectory safety officer to recognize abnormal trajectory characteristics and destroy the missile.

(4) Area *B* is an area 7,500 m wide and is an extension of the impact area and area *A* in the direction of fire.

(5) Area *F* is defined as the area within 61 m of the launcher that is endangered at the time of launch. Hazards are hot rocket exhaust and high velocity aggregate.

(6) Improved Hawk guided missile SDZ is constructed in the following manner.

(a) Lay out the target flight path on a map or scaled drawing of the firing range. Mark the minimum and maximum intercept points on the target flight path. The two lines joining the intercept points with the launcher define the minimum and maximum firing azimuths. Alternatively the minimum and maximum firing azimuth define the appropriate intercept points.

(b) At a range of 15 km from the launcher draw lines perpendicular to the firing azimuths.

(c) Along the line perpendicular to the maximum firing azimuth in the direction of increasing azimuth, mark point (1) at 4,000 m (trajectory corridor width), point (2) at the distance *W* (maximum debris distance from table 14–1 as

determined by intercept altitude), and point (3) at the distance of *W* plus 4,200 m (the outer boundary of the lateral secondary danger area, area *A*).

(d) Similarly, along the line perpendicular to the minimum firing azimuth, in the direction of decreasing azimuth, mark the points (4), (5), and (6) at 4,000 m, the distance *W*, and the distance *W* plus 4,200 m, respectively.

(e) Draw lines in the downrange direction from points (1), (2), and (3) parallel to the maximum firing azimuth and from points (4), (5), and (6) parallel to the minimum firing azimuth.

(f) At the firing section draw lines perpendicular to the firing azimuths. Along the line perpendicular to the maximum firing azimuth in the direction of increasing azimuth, mark point (7) at a distance of 1,000 m. Connect point (7) with points (1) and (2) with straight lines. Along the line perpendicular to the minimum firing azimuth in the direction of decreasing azimuth, mark point (8) at a distance of 1000 meters. Connect point (8) with points (4) and (5) with straight lines.

(g) Draw a semicircle, with center at the firing section with a radius of 2,500 m to the rear of the firing section.

(h) Draw straight lines tangent to the semicircle to points (3) and (6).

(i) With the firing section as the center, draw the arc of a circle with a radius equal to the sum of the maximum intercept range and the distance *X* from table 14–1 as determined by intercept altitude to intersect the lines defining the trajectory corridor, the primary danger area, and the lateral secondary danger area. This arc defines the maximum range boundary of the primary danger area.

(j) With the firing section as the center, draw the arc of a circle with a radius equal to distance *X*, plus 7,500 m (the width of area *B*) intersecting the lines defining the outer boundaries of the lateral secondary danger area. This arc defines the boundary of the maximum secondary danger area (area *B*).

(k) If the intercept range is less than 16 km, the inner boundary of area *A* is the distance *W* from the intercept point and the width of area *A* is 4,200 m at that range. All other procedures listed above apply.

14–9. Trajectory corridor

Trajectory corridors are constructed by scribing concentric semicircles indicating the position of missiles for various times of trajectory. (See fig 14–7.) By computing range to impact on ballistic trajectories for destruct times corresponding to time intervals for selected range positions, it is possible to establish destruction points which will ensure that missiles impact within respective impact areas. By calculating an angle of trajectory that is required to place a missile on the limits of a known impact area for each side of the line of firing, points may be fixed on the range time semicircles, both to the left and right of the line of fire, indicating the position at which the missile must be destroyed if impact is to be within the impact area. By connecting these points with a solid line, the trajectory corridor may be established for the training complex or range. Missiles will not be permitted to go beyond the limits of the trajectory corridor.

Chapter 15
Antitank Guided Missiles

15–1. TOW missiles

a. Firing conditions.

(1) Before firing any TOW missile, the entire SDZ will be cleared of all nonmission essential personnel.

(2) TOW missile firings must be accomplished within predetermined boundaries. The RCOs will ensure that an adequate SDZ exists along the missile target line (MTL) from each anticipated launch position within the predetermined boundaries.

(3) Procedures and precautions in FMs and TMs will be observed in all preparation and firing operations.

(4) Only those personnel actively engaged in firing and controlling TOW missiles as specified in appropriate FMs and TMs will be permitted in the SDZ. Mission-essential personnel directly associated with, but not actively engaged in the firing of TOW missiles may be located at protected sites within Area *H*, such as behind earthen berms.

(5) Personnel will neither stand nor permit any part of their body to be directly behind or in front of the TOW launcher while a missile is in the launch tube.

(6) TOW missiles should not be fired from any position which will permit the guidance wire to contact electrical power lines or the high power portion of electrically operated targetry. Commanders may deem it mission essential to fire at electrically powered targets where guidance wires may come in contact with the high powered portion of electrically operated targets. However, the firing commander must first apply a thorough risk management process, and have it approved by the installation RCO prior to firing.

(7) For moving targets, TOW missiles should be launched within the left and right limits established by the movement of the target. Missile impact should be as near to the original missile-to-target-line as possible. Large deflection deviations during flight should be avoided.

(8) TOW missiles will not be fired from within buildings or within 100 meters of any vertical or nearly vertical backstop.

(9) The range will be inspected after TOW firing activities to ensure, to the maximum extent possible that all guidance wires are removed from the training complex. Aircraft will not be used to remove guidance wires.

(10) Modification of area *I* is not authorized. Occupation of area *I* by unprotected troops is prohibited.

(11) All missiles should be tested using the missile test set as part of the overall system prefire checks. This will identify the majority of missiles with a potential for operational failures.

b. SDZ.

(1) The SDZ for basic TOW, improved TOW, TOW 2, TOW 2A, and TOW 2B missiles firing at fixed and moving targets are illustrated in figure 15–1. This figure represents a 1:1,000,000 probability of a hazardous fragment escaping the SDZ. This SDZ is based on the maximum ballistic range since there is no provision for command destruct by a trajectory safety officer. Required distances (distance *X*) for ground and aerial firings of basic TOW, improved TOW, TOW 2, and TOW 2A are given in tables 15–1 and 15–2 . Required distances (distance *X*) for ground and aerial firings of TOW 2B are given in tables 15–3 and 15–4.

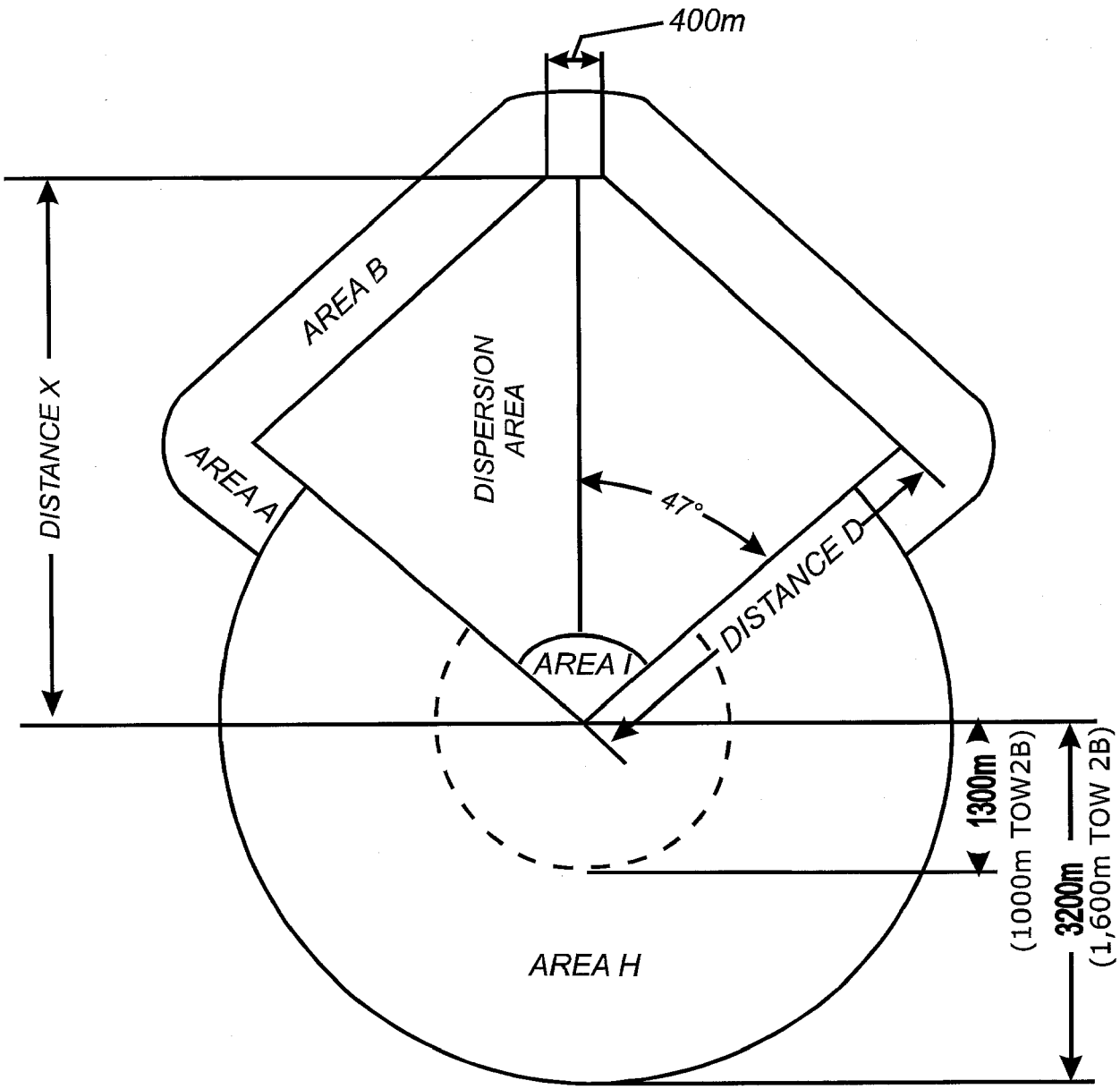

Note: When engaging moving or multiple targets, bisect figure 15–6 longitudinally and expand the missile target line to accommodate the target array. This will establish the left and right limits of fire.

Figure 15–1. SDZ for firing basic TOW, improved TOW, TOW 2A, and TOW 2B missiles with a 1:1,000,000 probability of escapement

Table 15–1
Basic TOW, improved TOW, TOW 2, AND TOW 2A missile range distances

Ground		Aerial				
Airspeed (knots)	0	Hover	Hover–50	100	100	150
Altitude (feet)	0	0–50	50–100	50–100	500	1,000
Distance *X* (meters)	5,000	5,100	5,300	5,500	5,700	6,000
Distance *D* (meters)	3,800	3,900	4,100	4,300	4,500	4,800

Table 15–2
Basic TOW, improved TOW, TOW 2, AND TOW 2A missile danger areas

Warhead	Area *A*	Area *B*	Area *H*
	(in meters)		
Inert warhead	100	100	Not required
HE warhead	750	750	3,200

Table 15–3
TOW 2B missile distances

Ground		Aerial				
Airspeed (knots)	0	Hover	Hover–50	100	100	150
Altitude (feet)	0	0–50	50–100	50–100	500	1,000
Distance *X* (in meters)	4,400	4,500	4,700	4,900	5,100	5,400
Distance *D* (in meters)	3,400	3,500	3,700	3,900	4,100	4,400

Table 15–4
TOW 2B Danger Areas

Warhead	Area *A*	Area *B*	Area *H*
Inert warhead	100m	100m	Not Required
HE warhead	600m	600m	1600m

(2) Area *F* is the danger area extending to the rear of the launcher. (See fig 15–2.) For aerial firings, area *F* is a semicircle with radius of 100 m for a missile launch with the helicopter below 50 ft AGL and 200 m for higher altitudes. For ground firings, area *F* is divided into a primary danger area and two caution areas.

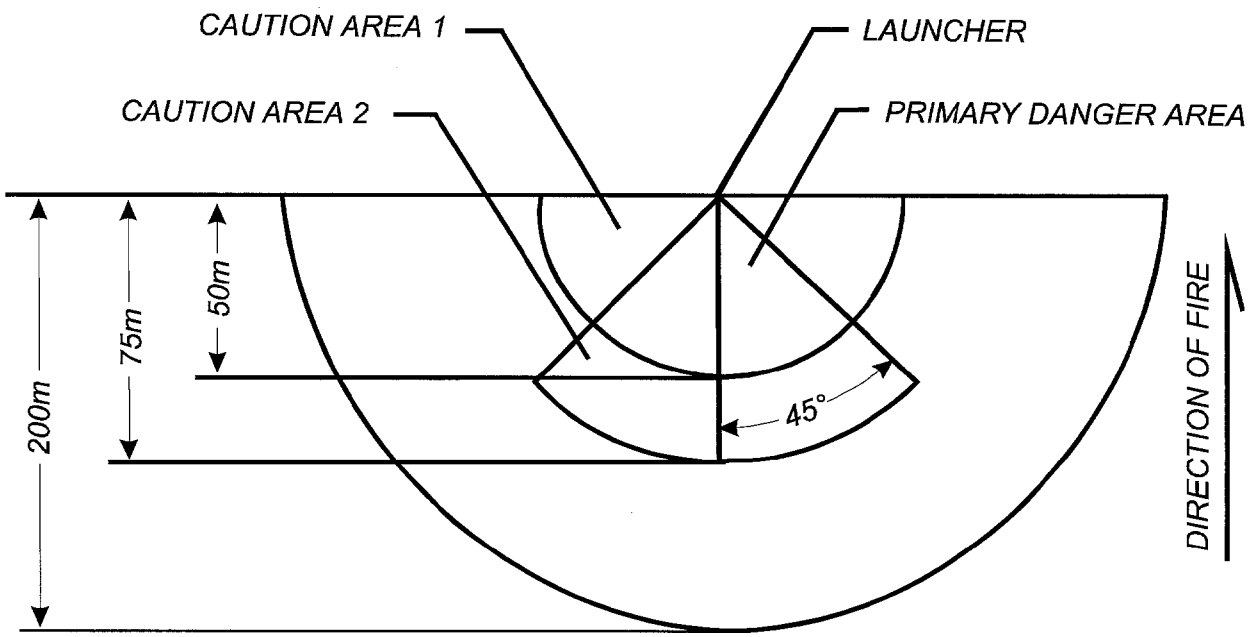

Notes:

[1] Primary danger area is a 90° cone with the apex of the cone centered at the rear of the missle launcher having a radius of 50 m. Serious casualties or fatalities are likely to occur to any personnel in this area during firing. Hazards include launch motor blast, high noise levels, overpressure and debris.

[2] Caution area 1 is an area extending radially from each side of the primary danger area to the firing line with a radius of 50 m. Permanent hearing damage could occur to personnel in this area during firing. The hazards are high noise levels and overpressure.

[3] Caution area 2 is an extension of the primary danger area with same associated hazards and personnel protection required. The radius of this area is 75 m.

[4] The 200-m zone is area *F* perimeter for aerial firings 15.25 m AGL and above.

Figure 15–2. SDZ, area *F,* for firing basic TOW, improved TOW, TOW 2A, and TOW 2B missiles

(a) The primary danger area is a 90° included angular cone with the apex of the cone centered at the rear of the missile launcher with a radius of 50 m. Serious casualties or fatalities are likely to occur to any personnel in the primary danger area during firing. The hazards are launch motor blast, high noise levels, overpressure, and debris.

(b) Caution area 1 is an area extending radially from each side of the primary danger area to the firing line with a radius of 50 m. Permanent ear damage could occur to personnel in this area during firing. Approved hearing protection will be worn by all personnel occupying this area. The hazards are high noise levels and overpressure.

(c) Caution area 2 is an extension of the primary danger area with the same associated hazards and personnel protection required. The radius of this area is 75 m.

(d) At least single hearing protection will be worn by all personnel within the rectangle 100 m to either side and 200 m to the rear of the TOW firing point.

(e) For the Marine Corps only, gunners and all personnel within the rectangle 100 m to either side and 200 m to the rear of the TOW firing point will wear helmets and flak jackets.

(3) Area *H,* a circular sector to the rear of the launch position, is established as an additional buffer zone to protect personnel from the hazards of high velocity fragments and missile debris resulting from detonation of the HE warhead during an "eject only" (ballistic trajectory upon failure of the flight motor to ignite once the missile has exited the launcher). Each "eject only" event for TOW, improved TOW, TOW 2, and TOW 2A is expected to produce about 100 fragments with a maximum range of 1,300 m and one slug with a maximum range of 3,200 m as shown in figure 15–1. The maximum flyback range for TOW 2B is expected to be 1,000 m, and one slug is expected to travel 1,600 m. Modification of area *H* is authorized by deviation. Area *H* is not required for inert warheads, or for HE warheads equipped with enhanced missile ordnance inhibiting circuit, as identified by U.S. Army Aviation and Missile Command for the Army or MARCORSYSCOM for the Marine Corps.

(4) Area *I* is a circular sector immediately in front of the launcher position. It is constructed by drawing an arc between the left and right lateral limits of the impact area (47° to each side of the missile target line (MTL) with a

radius of 800 m and centered at the launch position. Approximately 5.5 percent of the missiles fired are expected to impact within this area.

(5) SDZs with probability of escapement of 1 in 1,000,000(10^{-6}), 100,000(10^{-5}), 10,000(10^{-4}), and 1,000(10^{-3}), are depicted in figures 15–1 and 15–3 through 15–5, respectively. The use of these modified SDZs requires an approved deviation.

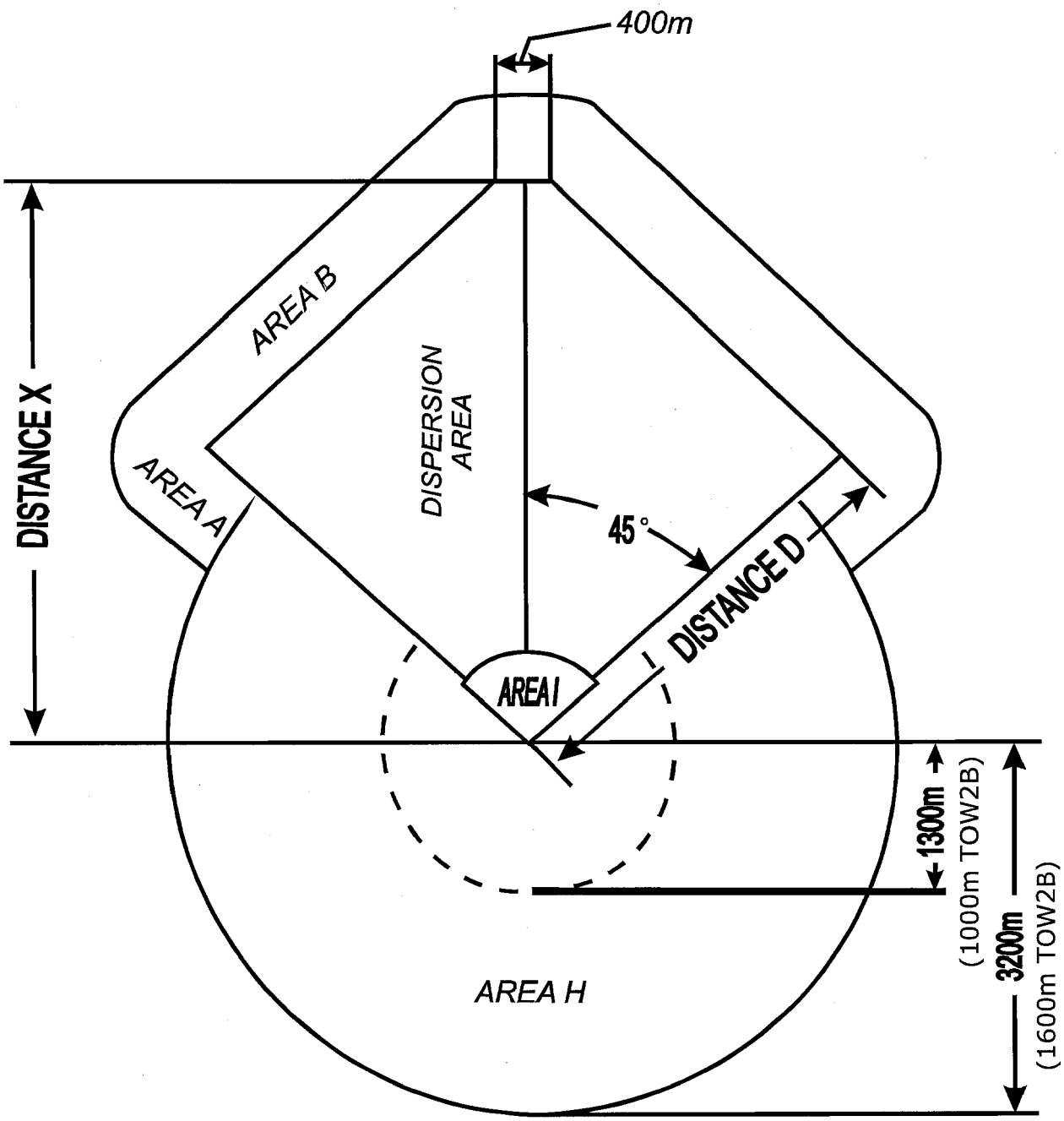

Figure 15–3. SDZ for firing basic TOW, improved TOW, TOW 2A, and TOW 2B missiles with a 1:100,000 probability of escapement

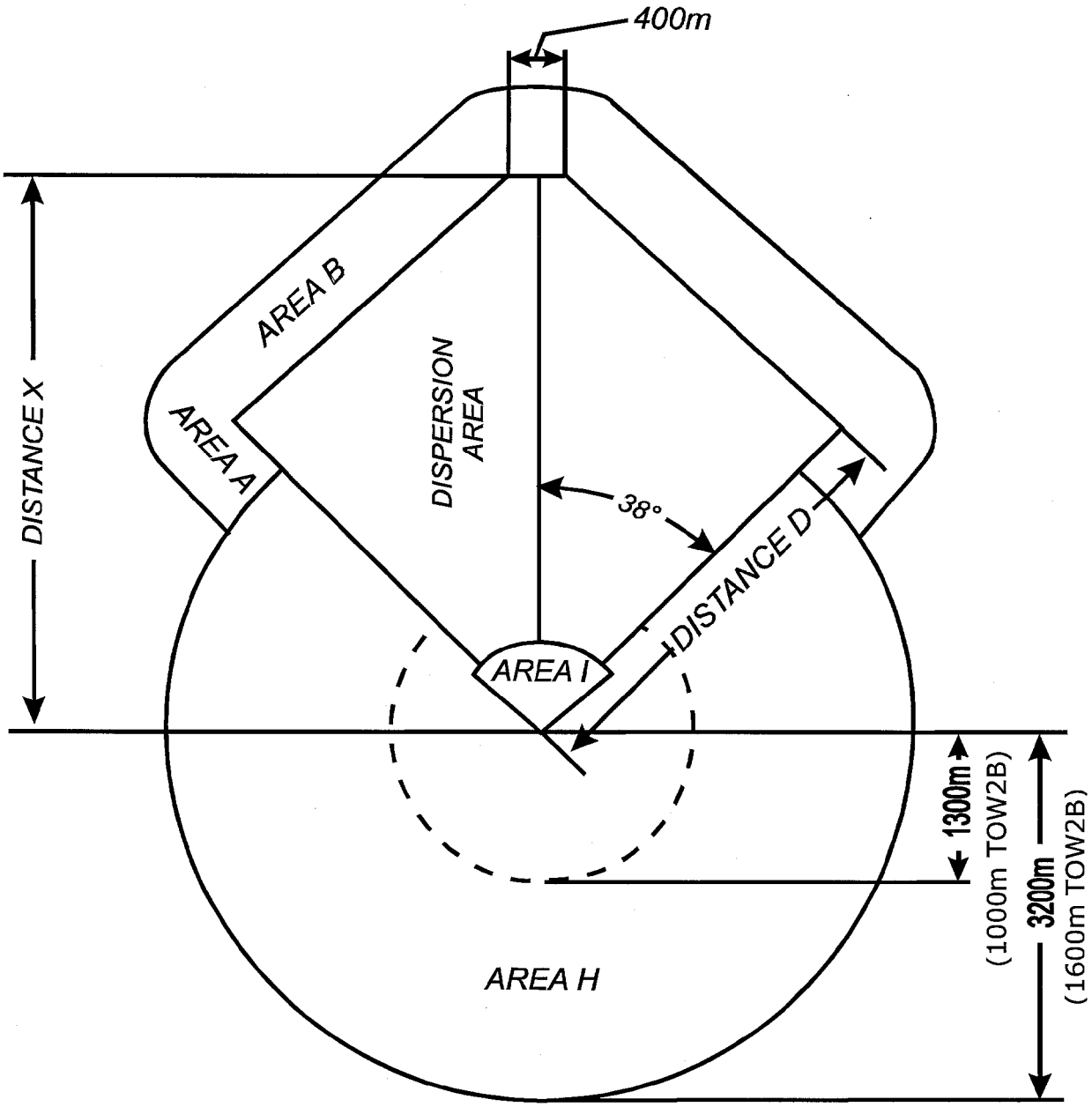

Figure 15–4. SDZ for firing basic TOW, improved TOW, TOW 2A, and TOW 2B missiles with a 1:10,000 probability of escapement

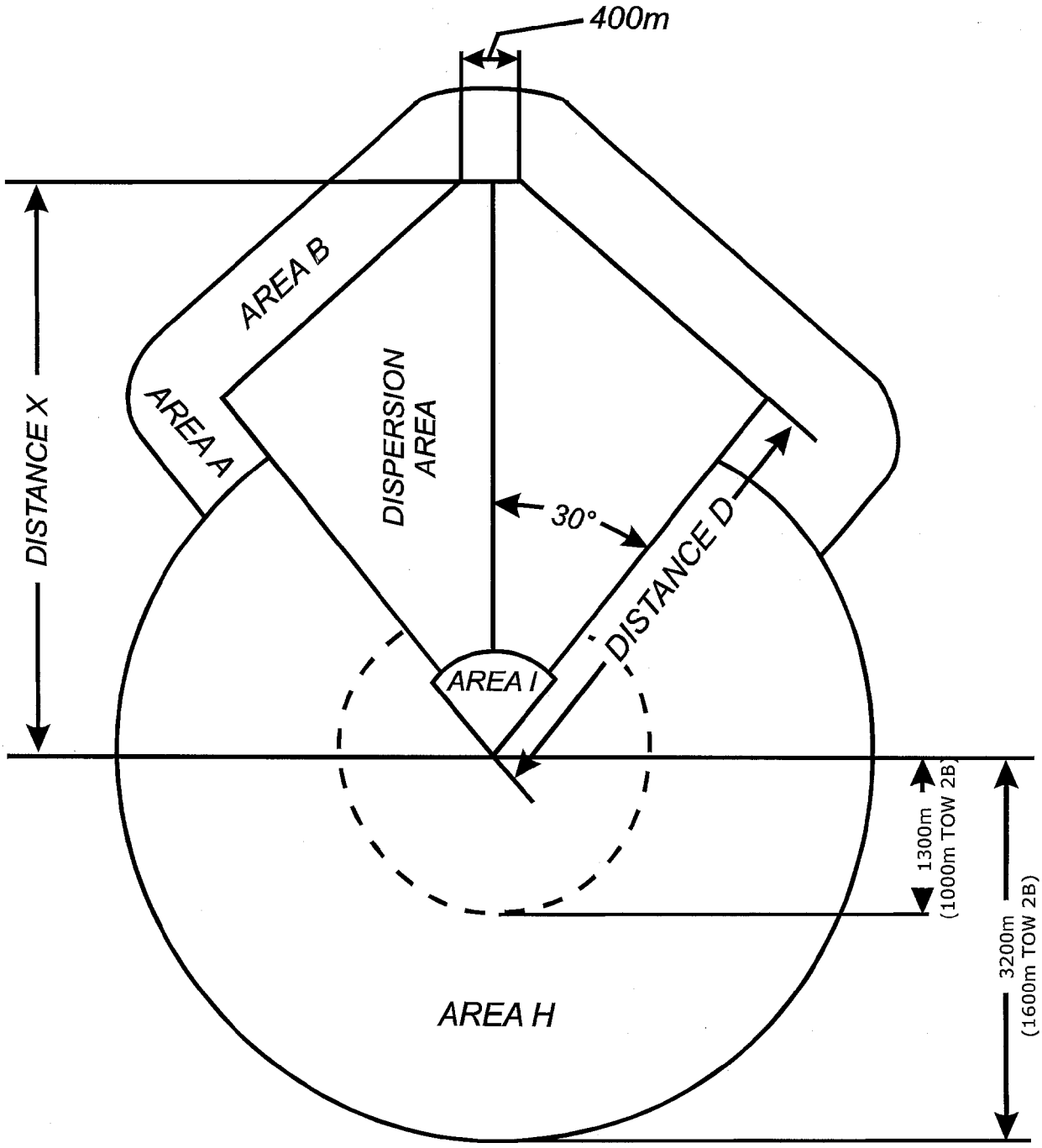

Figure 15–5. SDZ for firing basic TOW, improved TOW, TOW 2A, and TOW 2B missiles with a 1:1,000 probability of escapement (requires an approved request for deviation)

c. SDZ adjustments.

(1) *Ground launch mode.* If any point on the edge of the impact area is lower than the elevation of the launch position by more than 30 m, extend the impact area at that point by 1 meter for every meter of drop in elevation greater than 30 m. For example, if a point of the SDZ at the edge of the impact area is 65 m below the launch position, extend only that portion of the impact area 35 m (65–30=35), parallel with the edge of the impact area. For an illustration, see figure 15–6.

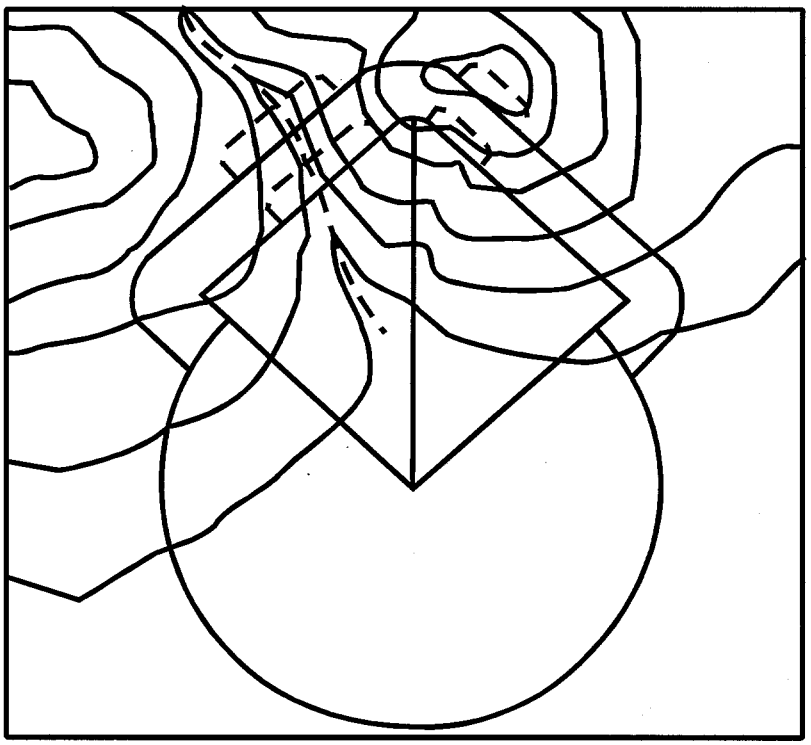

GROUND LAUNCH MODE

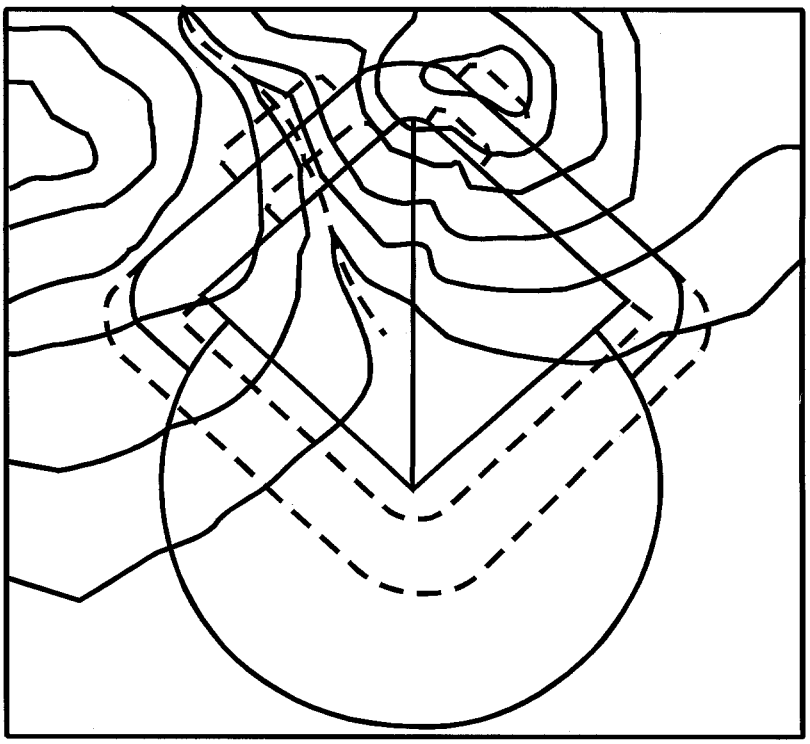

AERIAL LAUNCH MODE

Figure 15–6. SDZ adjustments for firing basic TOW, improved TOW, TOW 2A, and TOW 2B missiles in a ground or aerial launch mode

(2) *Aerial launch mode.* If the launch helicopter is more than 30 m above ground level at the launch position (firing line), extend the left and right edge of the impact area at area *A* by 1 m for every meter of helicopter altitude greater than 30 m above ground level. For example, if the launch helicopter is 65 m AGL, extend the impact area 35 m parallel with the edge of the impact area. The widths of areas *A* and *B* remain constant, as given in table 15–2. Corrections for terrain deviations are the same for the ground launch mode. These adjustments account for any depressions or valleys on the edge of the impact area. Distances *X* and *D* in tables 15–1 and 15–3 correct for altitude of the launch helicopter above ground level, not for depressions and valleys. For an illustration, see figure 15–6.

d. Multiple integrated laser engagement system training. The TOW missile uses the antitank weapons effect signature simulator (ATWESS) device for a noise simulator. Use the SDZ in figure 15–7 to determine safe limits of use. ATWESS devices must never be armed until ready to fire. A severe jolt to the ATWESS may cause the device to function. Approved single hearing protection is required.

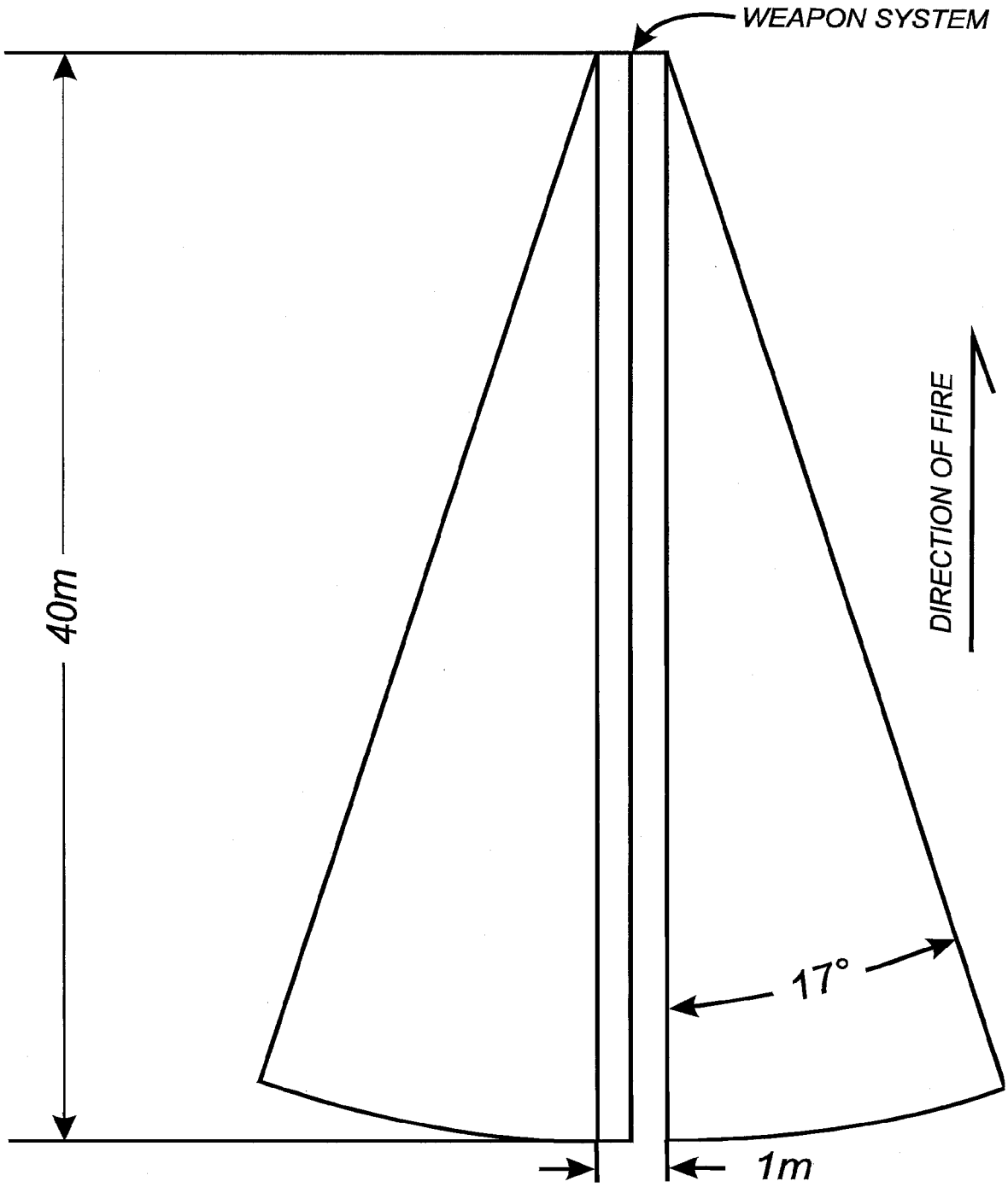

Figure 15–7. SDZ, area *F*, for ATWESS for TOW and DRAGON missiles

15–2. DRAGON and DRAGON generation II guided missiles

a. Firing conditions.

(1) The entire SDZ will be cleared of all nonmission essential personnel.

(2) Only those personnel actively engaged in firing and control of DRAGON guided missiles as specified by appropriate FMs or TMs will be permitted in the SDZ at the time of firing. Nonoperational personnel will move to a distance of at least 50 m to the side of the launcher (110 m when firing M222 HEAT rounds).

(3) The gunner and all other personnel in caution areas 1, 2, and 3 will wear flak jacket, helmet, eye protection, and single hearing protection.

(4) At least single hearing protection will be worn by all personnel within the rectangle 170 m to either side and 260 m to the rear of the DRAGON firing points.

b. SDZ.

(1) SDZ requirements for firing DRAGON and DRAGON generation II guided missiles with training and HE warheads at stationary and moving targets are provided in table 15–5 and figure 15–8.

Table 15–5
DRAGON and DRAGON generation II missile SDZ criteria (in meters)

Missile	Distance *X*	Area *A*	Area *B*	Dimension *K*
M222 HEAT	1,700	500	500	800
M223 practice	1,700	100	100	325

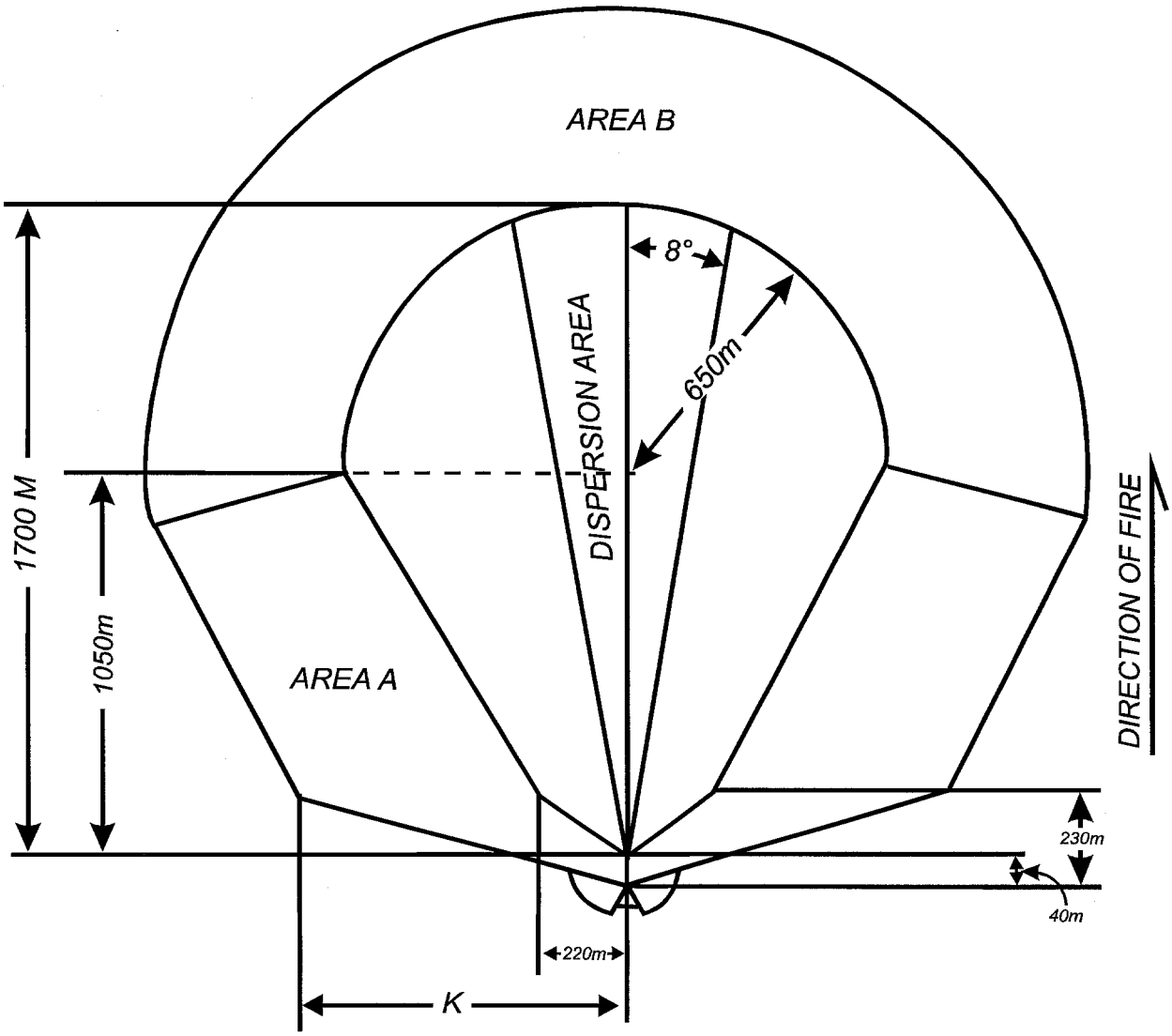

Figure 15–8. SDZ for firing DRAGON and DRAGON generation II missiles

(2) Area *F* is depicted in figure 15–9 and consists of the primary danger area and caution areas 1, 2, and 3.

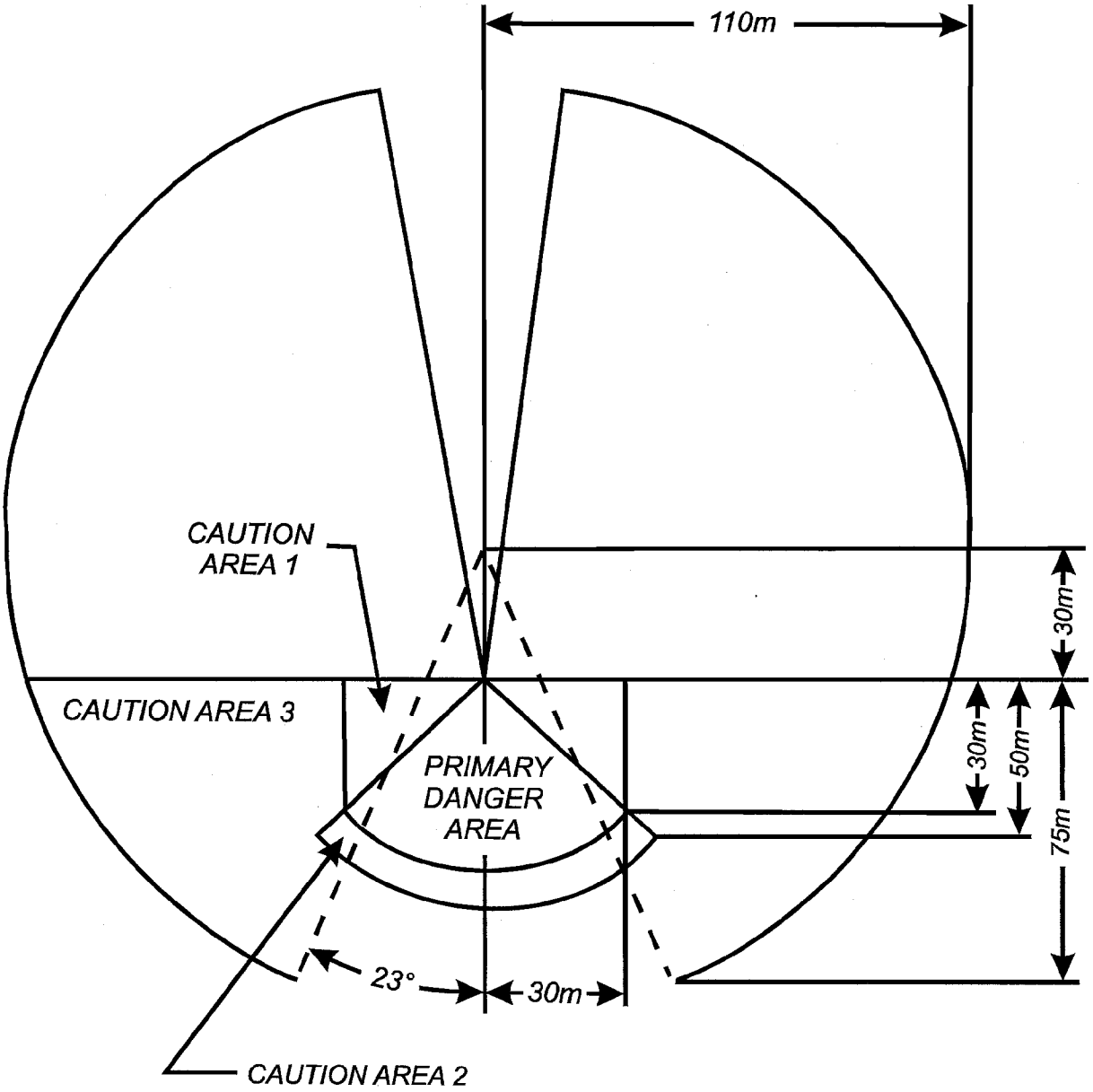

Figure 15–9. SDZ, area *F*, for firing DRAGON and DRAGON generation II missiles

(a) The primary danger area extends at a 90° angle 30 m to the rear of the launcher. Personnel will not occupy this area during firing.

(b) Caution area 1 extends from the rear of the primary danger area forward to the firing line.

(c) Caution area 2 is an extension of the primary danger area to a distance of 50 m rearward of the launcher.

(d) Caution area 3 is applicable only to the M222 HEAT warhead. It is a circle with a radius of 110 m with the center located 30 m uprange from the launch point. It does not include the safe sector located 230 m either side of a line bisecting the missile target line at a point 30 m uprange and extending rearward through the primary danger area.

(3) Caution area 3 is for early burst of the M222 HEAT warhead at minimum arming distances (30 m).

(4) Personnel will not stand or permit any portion of their bodies to be directly behind or in front of the launcher when the tracker and missile are mated.

(5) The DRAGON and DRAGON generation II guided missiles will not be fired from within buildings unless fired in accordance with FM 90–10–1 or other enclosures or within 50 m of a vertical or nearly vertical backstop.

(6) DRAGON and DRAGON generation II missiles should not be fired from any position which will permit the guidance wire to contact electrical power lines or the high power portion of electrically operated targetry. Commanders may deem it mission essential to fire at electrically powered targets where guidance wires may come in contact with the high powered portion of electrically operated targets. However, the firing commander must first conduct a thorough risk assessment and develop controls and have them approved by the installation RCO prior to firing.

(7) Procedures and precautions in DRAGON and DRAGON generation II guided missiles FMs and TMs will be complied with in all preparation and firing operations.

c. Multiple integrated laser engagement system training.

(1) The DRAGON missile uses the ATWESS device for a noise simulator. Use the SDZ in figure 15–7 to determine safe limits of use.

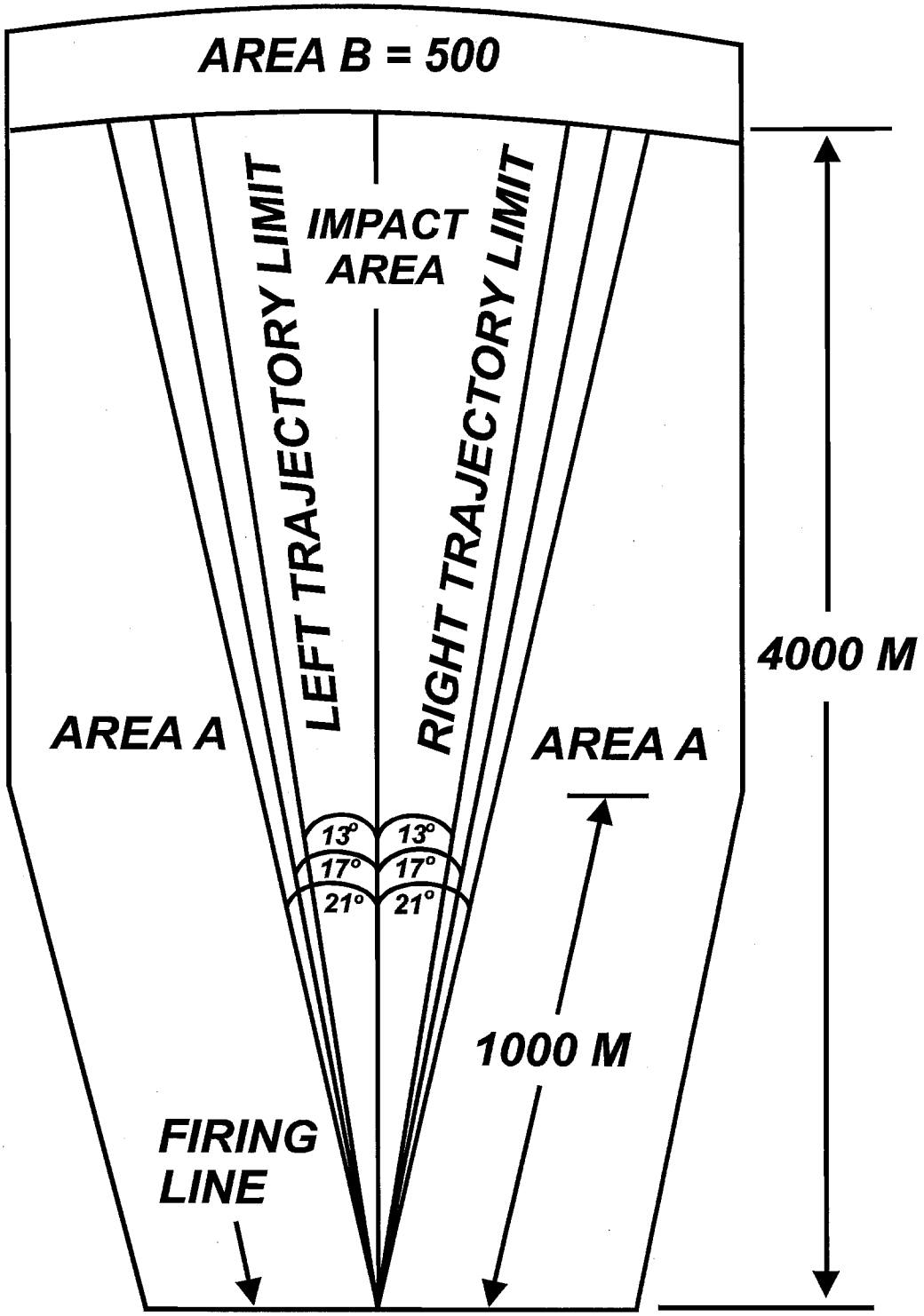

Figure 15–10. SDZ for Javelin missile

(2) ATWESS devices must never be armed until ready to fire. A severe jolt to the ATWESS may cause the device to function. Approved single hearing protection is required.

15–3. JAVELIN Guided Missile

The JAVELIN is a shoulder-launched, man-portable, antiarmor weapon system. It fires a passive imaging infrared missile with a lock-on before launch guidance system.

a. Firing conditions.

(1) Before firing any JAVELIN missile, the entire SDZ will be cleared of nonmission-essential personnel. Only those personnel specified in appropriate FMs and TMs will be permitted in the SDZ.

(2) JAVELIN missile firings will be accomplished within predetermined boundaries. Range control officers will ensure that an adequate SDZ exists along the MTL from each anticipated launch position within the predetermined boundaries.

(3) See applicable FMs and TMs for preparation and firing operations.

(4) Personnel will neither stand nor permit any part of their body to be directly behind or in front of the JAVELIN launcher.

b. SDZ construction for the JAVELIN antitank missile.

(1) The SDZ for firing JAVELIN missile at a fixed target is illustrated in figure 15–10. This figure represents missile fly out probabilities of 1 in 1,000,000 (10^{-6}) (21°), 100,000 (10^{-5}) (17°), and 10,000 (10^{-4}) (13°.) HQDA policy requires that residual risk of fragment escapement or other danger to the public will not be greater than 10^{-6}.

(2) Area *A* is 500 m wide for the HE warhead equipped rounds and 200 m for inert warhead rounds from the launcher to a point 1,000 m downrange. At 1,000 m, the flight motor is fully exhausted. The remaining downrange portion of area *A* tapers down to a 200-m width for HE warhead rounds and 100 m for inert warhead rounds at 4,000 m (distance *X*.) Area *A* will contain missile and warhead debris from impacts on the boundary selected fly out line/trajectory limit, and portions of the missile that remain attached to the propulsion section which may continue to be propelled until flight motor burnout.

(3) Area *B* will contain the debris associated with missile landing at the up-range edge of the Area *B*. Area *B* is 500 m for both HE and inert warheads.

(4) Area *F* (see fig 15–11) consists of the primary danger zone and caution areas 1, 2, and 3.

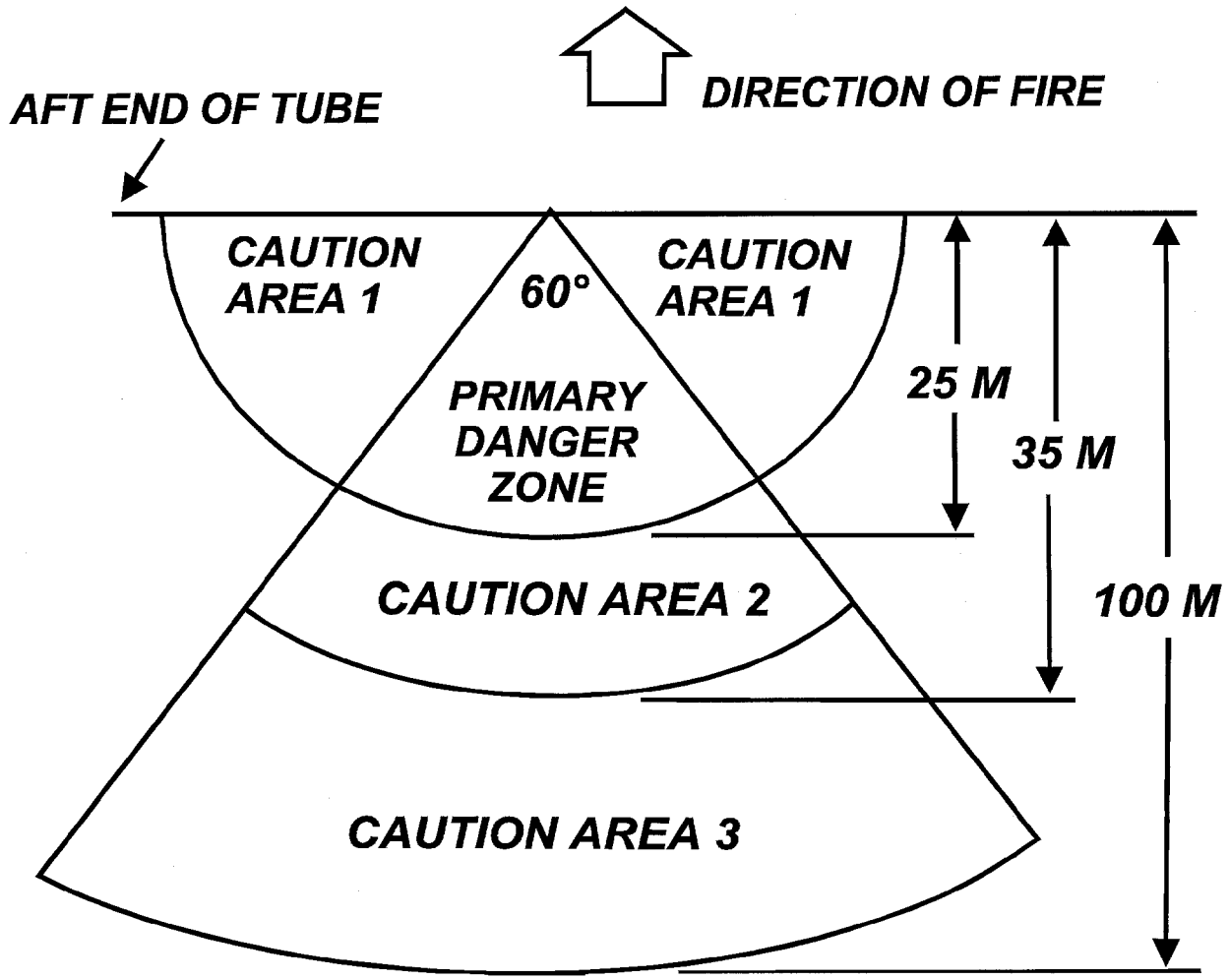

Figure 15–11. SDZ, area *F*, for Javelin missile

(a) The primary danger zone is a 60° angle (30° either side of the rearward extension of the MTL) with the apex at the aft end of the missile launch motor. This zone has a 25-m radius. Additionally, the primary danger zone is extended forward to the firing line from a distance of 1 to 5 m left and right of the MTL (see fig 15–12.) Personnel in this zone are subject to serious injury by activation of the flight motor pressure relief system.

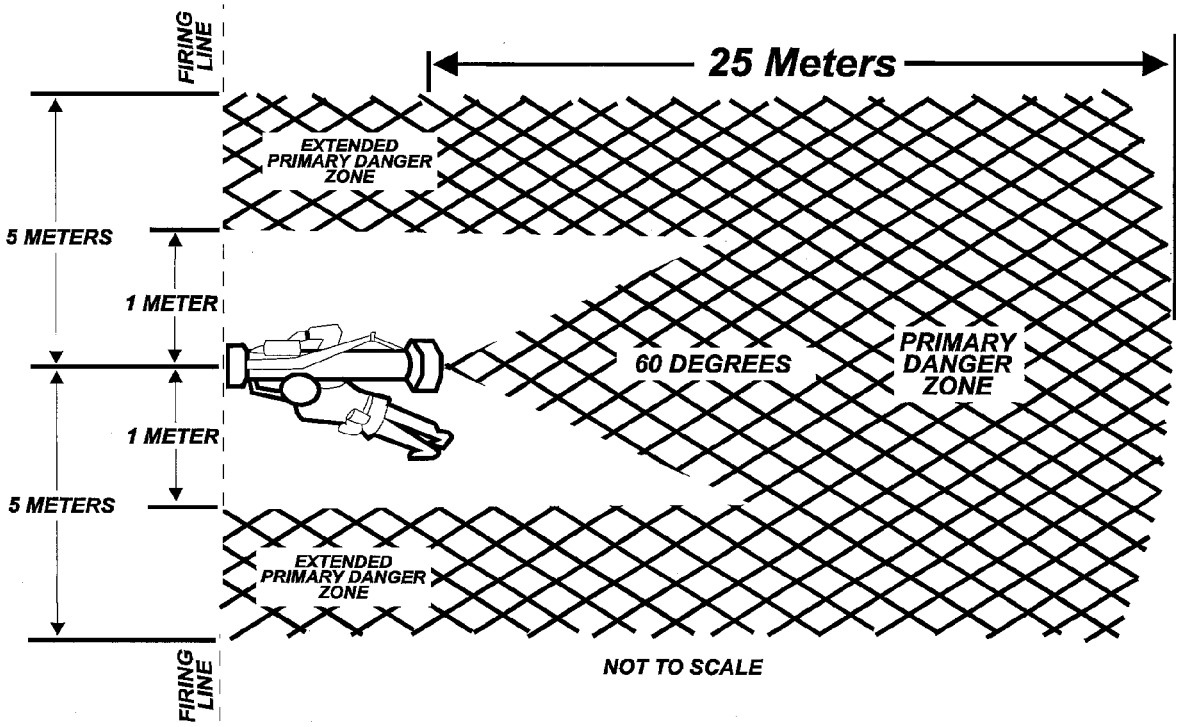

Figure 15–12. Primary danger zone, area *F*, extension for activation of Javelin missile flight motor pressure relief system

(b) Caution area 1 is an extension of the 25-m primary danger zone arc forward to the firing line on each side of the launcher. Serious hearing impairment or damage from frequent exposure could occur to personnel in this area during firings. Personnel in this area must wear approved hearing protection devices and eye protection.

(c) Caution area 2 is an extension to the rear of the primary danger zone, 10 m beyond the primary danger zone. Serious hearing impairment and eye damage could occur to personnel in area 2 during firings. Personnel in this area must wear approved hearing and eye protection devices.

(d) Caution area 3 is an extension to the rear of the primary danger zone within the 60° sector with a 100-m radius. This area is affected by the activation of the flight motor pressure relief system. Personnel located in this area will wear eye protection.

(e) For the Marine Corp, wearing of helmets and flak jacket is required by all personnel in area *F*.

Chapter 16
Chemical Agents and Smokes

16–1. Chemical agents

a. The use of lethal or incapacitating chemical agents in training is prohibited. For the Army, the use of a chemical agent in combat would require a change in public policy by the National Command Authority. Chemical agent use must be addressed case by case in special safety analyses. The exception is the Chemical Decontamination Training Facility, Fort Leonard Wood, MO, where training regularly involves live chemical agents.

b. This paragraph is provided for information only. Chemical munitions require a minimum safe distance for friendly troops for protection from downwind vapor hazards. Chemical munitions also have missile fragment and ricochet hazards associated with the HE components of the munitions. The portions of this pamphlet covering the firing of HE ammunition also apply to chemical filled munitions when assembled with HE loaded components. Positive protection and boundary limits used during training with HE ammunition are also required to protect against fragments and ricochet of chemical ammunition.

16–2. Riot control agents

a. Except when prohibited by regulations or higher authority, commanders may use riot control agents (RCAs) in training, subject to the following:

(1) Use of RCAs in training is limited to CS, CSX, CS–1, CS–2, and CR. All other RCAs are prohibited for training use.

(2) Use of RCAs in training requires supervision by personnel specially trained in field behavior, individual protection, and first aid for RCAs. Personnel that meet these criteria are chemical officers (branch code 74), chemical NCOs (MOSC 54B), school trained NBC officers (SSI 3R) and NCOs (SQI C.)

(3) RCAs will not be used under conditions that are dangerous to life or property. Minimum safe distances to heavily traveled installation roads, railroad right of ways, airfields (including all aircraft landing areas), or inhabited areas are:

(a) CS chambers will be at least 100 m away from heavily traveled roads, 500 m from aircraft operations and inhabited areas, and 1,000 m from the nearest installation boundary.

(b) Field training exercises involving RCAs will be 500 m or more away from public traffic routes, the nearest inhabited buildings, and 1,000 m from installation boundaries.

(4) Prior to a scheduled RCA exercise, training supervisors must conduct a readiness evaluation of personnel. Before being exposed to RCAs, all personnel with respiratory ailments, open wounds, severe facial acne, or any active dermatitis, and pregnant soldiers must be referred to a medical officer for evaluation. The medical officer will evaluate the health records of these individuals and, when necessary, examine the soldiers to determine their readiness to undergo training without undue medical risk. The examination results (stating can/cannot participate in training with RCAs ONLY) will be documented in the soldiers' medical records.

(5) Commanders must ensure protective masks are available for all soldiers participating in training.

(6) When protective gear is worn, commanders will consider the additional heat stress placed on soldiers. When using the wet-bulb globe temperature to determine the heat category, add 10° if troops are in body armor mission-oriented protective posture level four. High ambient temperatures, high humidity, and heavy workload are factors that increase the potential for heat injuries. To reduce the heat stress risk, commanders—

(a) Provide a water supply and encourage all soldiers to drink plenty of water. Supervisors will monitor personnel undergoing training to ensure personnel frequently drink water to replace lost fluids.

(b) Reduce the mission-oriented protective posture level under high heat stress conditions when possible.

(c) Schedule additional rest breaks during training to allow troops to cool off. These periods also can be used for critiques. Where possible, use vehicles to move personnel who are in a protective posture.

(d) Ensure subordinate commanders and leaders check their personnel for early signs of heat stress. Authorize frequent breaks while operating in a protective posture.

(7) Wearing of contact lenses while masked is prohibited. Soldiers who wear contact lenses must remove them and use standard prescription eyeglasses during chemical defense training that includes wearing the protective mask. Unnecessary eye irritation will occur if RCA particles are trapped under contact lenses. The lenses also may be lost due to excessive tearing. All individuals requiring corrective lenses must have masks with correctly fitted optical inserts.

(8) Unprotected personnel will not be exposed to RCAs longer than 15 seconds.

b. Personnel specified in paragraph 16–2*a*(2) will supervise the mask confidence course.

c. Firing of projectiles or dropping bombs containing chemical agents determined to be harmful to the environment or wildlife is not authorized. When a deviation is required, it will be approved only after conducting a through risk assessment, identifying associated long and short term hazards, establishing and implementing controls, and acceptance of residual risk.

d. Employment conditions.

(1) CS, CSX, CS–1, CS–2, and CR will be used in training only under the supervision of an NBC officer or NCO

who has received formal training in the characteristics, capabilities, and training applications of these agents. Only CS in capsule form may be used in the CS chamber.

(2) RCAs will not be released when personnel located downwind will be affected, unless exposure to a controlled concentration is desired. CS agents will not be released within 50 meters of spectators.

(3) CS agents irritate the eyes, the respiratory tract, and moist skin areas of the body. A field protective mask, field clothing with collar, cuffs buttoned and trouser legs tucked into boots will protect against field concentrations of CS. Personnel handling or dispensing bulk CS will wear rubber gloves, hood, rubber boots, rubber apron, protective mask, and field clothing secured at neck, wrists, and ankles.

(4) Individuals affected by RCAs will move to fresh air and face into the wind for 5 to 10 minutes, avoid rubbing the eyes, and remain well spaced from other affected personnel. If accidentally exposed to an RCA, clothing will be removed from the affected skin as soon as possible. Flush the exposed area(s) with large volumes of cool water for not less than 15 minutes, and then seek prompt medical attention. If available, mild soap should be used to cleanse the contaminated skin.

(5) Hot water should not be used when showering as it will raise the vapor point of the CS resulting in further contamination and discomfort, especially to the eyes and respiratory system.

(6) When eyes are contaminated with a CS agent, treat them with a 1 percent solution of sodium bicarbonate (baking soda). If not available, hold the eyes open with fingers, flush with water not fewer than 15 minutes, then seek medical attention.

(7) Contaminated clothing will be removed from the area to prevent accidental contamination of unprotected personnel.

e. When riot control agents are transported in Army or Marine Corps aircraft, compliance with AR 95–1, AR 95–27 or MCO P4030.19G is required.

16–3. Smoke

The use of smoke in training poses special health and safety issues. The following precautions apply to all smoke training with fog oil, hexachloroethane (HC), red phosphorus, WP, plasticized WP, terephthalic acid (TA), and colored and diesel smokes.

a. Personnel will carry a protective mask when participating in exercises that include the use of smoke. Personnel will mask—

(1) Before exposure to any concentration of smoke produced by M8 white smoke grenades, M83 smoke grenades (TA), smoke pots (HC & TA smoke), or metallic powder obscurants.

(2) When passing through or operating in dense (visibility less than 50 m) smoke such as smoke blankets and smoke curtains.

(3) When operating in or passing through a smoke haze (visibility greater than 50 m) and the duration of exposure will exceed 4 hours.

(4) Anytime exposure to smoke produces breathing difficulty, eye irritation or discomfort. Such effects in one individual will serve as a signal for all similarly exposed personnel to mask.

(5) When using smoke during military operations in urban terrain training or when operating in enclosed spaces. The protective mask is not effective in oxygen deficient atmospheres. Care must be taken not to enter areas where oxygen may have been displaced.

b. Clothing is to be laundered and personnel will shower after exercises involving exposure to smoke. Personnel exposed to smoke should reduce skin exposure by rolling down their sleeves.

c. Special care must be taken when using HC and TA smoke to ensure that appropriate protection is provided to all personnel who may be exposed. When planning for the use of HC smoke in training, consideration must be given to weather conditions and the potential downwind effects of the smoke. Positive controls, (observation, control points, communications) must be established to prevent exposure of unprotected personnel. Detailed hazard information is available on appropriate materiel safety data sheet.

d. FS (sulfur trioxide-chlorosulfonic acid solution) and FM (titanium tetrachloride) smoke will not be used in training.

e. Smoke will not be used in public demonstrations, displays, or ceremonies unless positive dissipation of the smoke can be assured and no exposure to the public or nonparticipating personnel is expected. A risk management plan will be developed by the agency conducting the public demonstration, in conjunction with the installation range control officer and safety director, for all uses of smoke in demonstrations, displays, or ceremonies.

16–4. Smoke pots

a. Personnel manually firing HC and TA smoke pots will mask and keep their face turned away from the pots to prevent burn injuries. Once HC and TA smoke pots have ignited, personnel will quickly move away a minimum distance of 30 m.

b. Precautions will be taken to prevent ground fires. HC and TA smokepots will not be fired inside buildings, tents, or other enclosed areas because of fire and health hazards from associated fumes. Exceptions are building or structures

specially designed for smoke training, and only after conducting a thorough risk assessment, developing and implementing controls, and acceptance of the residual risk by the appropriate commander.

c. HC and TA smokepots must be kept dry. Any addition of water to HC and TA smoke mixtures may cause it to burn erratically, explode, or result in spontaneous combustion. HC smoke pots will not be ignited during visible precipitation (snow or rain).

d. The M4A2 smoke pot must be vented for at least 5 minutes in accordance with TB CML 100.

e. When electrically firing the M5 HC smoke pot, at least 30 m of WD–1/TT wire will be used.

16–5. Oil smoke candles

Oil smoke candles (M6, SGF2) are used to produce nontoxic smoke in confined areas primarily to simulate fires in buildings or ships for fire drills and to train firefighters. The correct procedure for use is to place the candle on its base atop a stable platform away from combustible materials, pull the safety pin, and release the safety lever.

16–6. Chloroacetophenone

Chloroacetophenone is classified obsolete. It is not authorized for use in training.

Chapter 17
Mines, Firing Devices, Trip Flares, Simulators, and Explosive Charges

17–1. General

a. Basic procedures for handling and detonating explosives, mines, firing devices, trip flares, and simulators used by personnel in training are addressed in this chapter. These procedures do not include projectiles, rockets, bombs, fuzes, or firing devices covered in other paragraphs of this pamphlet unless otherwise stated.

b. The following safe practices pertain to standard military and commercial explosives used by the Army and the Marine Corps, except where noted. They also pertain to items containing explosives such as demolition blocks, mines, mine clearing demolition snakes, and blast-driven earth rods. Marine Corps units will use the requirements contained in NAVSEA OP5, volume 1, NAVSEA SWO60–AA–MMA–010, EODB/TM/TO 60A series, and in the Guidebook for Assault Entry Techniques.

(1) General safe practices for handling and transporting explosives are prescribed in TM 9–1375–213–12, FM 5–250, and DA Pam 385–64. For Marine Corps units, information regarding transportation and handling of explosives is in NAVSEA OP5, Volume 1, NAVSEA SWO20–AF–ABK–010, NAVSEA SWO20–AC–SAF–010, NAVSEA SWO20–AC–SAF–020, NAVSEA SWO–AC–SAF–030, and MCO P8020.10A.

(2) Explosive ordnance disposal (EOD) demolition activities will be conducted in accordance with the provisions of AR 75–15 for U. S. Army EOD personnel and NAVSEA OP5 and EODB 60 series publications for Marine Corps EOD personnel.

(3) Commercial dynamite will not be stored for prolonged periods at temperatures above 90 °F because exudation of the nitroglycerin is likely to occur. Storage below 32 °F tends to make it sensitive to shock. Dynamite will not be moved or transported if there is evidence of exudation or if it has been frozen. In such cases, the dynamite will be considered unserviceable and will be disposed of by EOD personnel. When possible, avoid the use of commercial dynamite in a combat environment because of its storage requirements, sensitivity to moving, and possible detonation from direct fire rounds or artillery fragments. For Marine Corps units, unserviceable ammunition and any explosive not to be used as designated for training and operations will be returned to the issuing ASP until disposition guidance is provided by MARCORSYSCOM (AM–ESS).

(4) Commercial explosives cannot be burned without risk of explosion. EOD will dispose of commercial explosives. For Marine Corps units, unserviceable ammunition and any explosive not to be used as designated for training and operations will be returned to the issuing ASP until disposition guidance is provided by MARCORSYSCOM (AM–ES).

(5) Some foreign military explosives are not as stable as U.S. explosives. EOD will dispose of foreign explosives under U.S. military control as appropriate. For Marine Corps units, unserviceable ammunition and any explosive not to be used as designated for training and operations will be returned to the issuing ASP until disposition guidance is provided by MARCORSYSCOM (AM–ES).

(6) Gases released by detonation of explosives are toxic. Avoid exposure to fumes. Position personnel upwind from detonation points and wait until smoke and fumes disperse before proceeding down range.

(7) Buried charges will be primed with detonating cord leading to above ground electric or nonelectric blasting caps. Blasting caps will not be buried underground as they are sensitive to shock and may detonate if hit by a metal tool or other hard object.

(8) Detonating cord should be used to prime charges on above ground charges to minimize the need to use blasting

caps. Once the explosives charges are primed with detonating cord, the detonating cord will be initiated with an above ground electric, nonelectric blasting cap, or modernized demolition initiator (MDI).

(9) Lightning and other sources of extraneous electricity (static electricity, high power lines, radio transmitters, cellular phones, and so forth) can initiate electroexplosive devices. Electroexplosive devices are subject to hazards of electromagnetic radiation to ordnance. Nonelectric blasting techniques are invulnerable to most extraneous electric signals but not to lightning. All demolition training operations must be discontinued at the approach of an electric or severe dust storm.

(10) Detonation circuits will not be connected or armed on any munition unless the intent is to detonate the munition. When munitions are to be detonated, the area will be cleared of all nonmission essential personnel with a minimum crew remaining to connect the detonation circuit. Live blasting caps or other live detonators will not be located at training sites if munitions are not to be detonated.

(11) All personnel within the SDZ will wear approved protective helmets and hearing protection for all detonations, including while in the confines of missile-proof shelters. Flak vests will be worn by personnel within the SDZ but outside the missile-proof shelter. Eye protection should be worn.

(12) Only mission-essential personnel will be allowed in SDZs during firing.

(13) Mixing of live and inert demolitions for training is prohibited.

c. When temporary open storage of explosives is used, stacks will not exceed 227 kg of explosives. Distance between stacks should not be less than 45 m in accordance with the provisions of DA Pam 385–64. Live and inert munitions will not be mixed. Demolitions effects simulators, which contain live explosives, as well as other simulators are considered live munitions.

d. Basic demolition training will include the following procedures.

(1) Procedures in FM 5–250 will be used for all training in the use of demolitions. Field expedient methods outlined in applicable field manuals are authorized for use. Unit commanders will receive prior approval from the installation range control officer with concurrence of the installation safety director prior to conducting activities employing field expedient procedures or explosives.

(2) While engaging in demolition training, the minimum distances given in paragraph 17–1*f* may be reduced to 50 m if bare charges of not more than 2.27 kg are used on the surface of specially prepared sites. The site condition will conform as follows:

(a) Charges will be detonated on a sand cushion that has been screened and is pebble or stone free (material passes through a #10 sieve). The sand cushion will not be less than that specified in table 17–1. Subsequent charges will not be placed where cratering from previous detonations has reduced the depth of sand.

Table 17–1
Dimensions of sand cushion

Explosives	Sand depth	Radius of sand surface
(in pounds)	(in meters)	
0.25	0.6	0.2
0.50	1.0	0.3
1.00	1.3	0.5
2.00	1.6	0.6
4.00	2.0	1.0
5.00	2.3	1.1

(b) Charges will be detonated on soil free from gravel, rock, metal, or other possible missiles to a depth of at least 0.15 m. Ground preparation will include loosening and raking the soil. A barricade constructed of sandbags or other suitable protective material at least 1 m above the surrounding level of ground will be provided between the location of the charge and personnel. Charges will be placed not less than 1 or more than 2 m from the barricade. The detonation site will be maintained to prevent formation of clods or exposure of gravel or rock on or near the surface. It is helpful to place a layer of porous, water permeable matting (geotextile fabric consisting of woven nylon, polyester, and so forth) between a rocky layer of soil and the upper layer of soil that must be free of gravel, rock, metal, or other potential missiles. This will help prevent contamination from migration of gravel and rock to the upper soil layer and help reduce long-term maintenance costs.

(3) During basic or familiarization demolition training, instructors will supervise not more than five students while they are priming individual charges. Not more than five students will prime charges at a time. The remainder of students and observers will withdraw to a safe position before priming occurs.

(4) Single charges placed against steel, concrete, wood, or other solid material during training or demonstrations will be emplaced on the side nearest observers so that major fragments are propelled away from the observers.

(5) Dual initiation systems are preferred over single initiation systems to increase reliability. Consult FM 5–250 and use the best combination of initiation systems to decrease the possibility of misfires.

e. Explosives can propel lethal fragments and debris hazards great distances.

(1) The distance explosion propelled fragments or debris will travel in air depends mainly on the relationship between weight, shape, density, initial angle of projection, and initial velocity. Fragment and debris hazards from steel-cutting charges extend a greater distance under normal conditions than that from cratering, quarrying, or surface charges of bare explosives.

(2) Fragment and debris hazard distances at which personnel in the open are relatively safe from missiles created by bare charges placed in or on the ground, regardless of type or condition of the soil, are as follows:

(a) Over 193 kg charges, minimum 750-m fragment and debris hazard distance.

(b) 12 to 193 kg charges, computed from the formula: Safe distance in meters=100 times the cube root of the pounds of explosive ($D = 100 \times W^{1/3}$).

(c) Fewer than 12 kg, minimum, 300 m.

(d) See table 17–2 for computed safe distances for personnel near bare charges.

Table 17–2
Safe distances for personnel (near bare charges)

Charges, in kilos	Missile hazard distance, in meters
Over 227	Minimum 800
12.27 – 227	Computed[1]
Less than 12.27	Minimum 300[2]

Notes:
[1]Computed missile hazard distance in meters = 100 times the cube root of the pounds of explosives:

$$D = 100 \times \sqrt[3]{W}$$

[2]When charges are placed on specially prepared or selected sites (para 17–1*d*(2)(a)) to eliminate a missile hazard, this distance may be reduced to not fewer than 50 m.

(3) For ¼-pound charges used to simulate enemy artillery fire and mortar fire that are detonated in specially constructed demolition pits, constructed as described in paragraph 17–12*e*(8), the minimum distance may be reduced to not less than 3 m.

f. Blast effects generate hazards.

(1) Generally, the greatest danger to personnel is missiles thrown by an explosion. However, blast effect (such as increase in air pressure) also generates hazards to personnel located within the SDZ. Special protective features used at detonation or demolition sites to eliminate or confine missiles may not reduce or mitigate overpressure and noise hazards.

(2) DA PAM 40–501 specifies that hearing protection is required for any exposure noise decibel greater than 140 dBP. Follow the hearing protection recommendations listing in the technical manuals for the explosive devices used. If the hearing protection recommendations are not listed in the manuals, compute the 140 dBP contour from the formula: Distance to 140 dBP contour in meters = 300 times the cube root of the weight of explosive in kilograms ($D = 300 \times W^{1/3}$). Table 17–3 contains the distances for various weights of explosives.

Table 17–3
Dimensions of sand cushion

Weight of explosives		Distance to 140 dBP contour
(in kilograms)	(in pounds)	(in meters)
0.1	0.25	145
0.23	0.5	183
0.45	1	230
0.91	2	290
2.27	5	394
4.54	10	497
9.1	20	626
22.7	50	849
45	100	1070
91	200	1348

g. The following methods are used for placing charges placed on steel and concrete.

(1) *Charges placed on steel.*

(a) The preferred method of employing steel cutting charges is in a bunker designed for that purpose. Steel cutting charges (amount of explosives and placement) will be calculated based on appropriate formulas and tables in FM 5–250.

(b) If a steel cutting bunker is not available, charges will be fired in an excavated pit that is at least 1 m deep, and a mat made of a hemp type material must cover the charge. Steel-cutting charges fired outside a steel-cutting bunker will not exceed 0.9 kg.

(c) Personnel must be a minimum of 100 m from the charge at detonation in a missile proof shelter, 300 m in defilade, or 1,000 m if in the open.

(2) *Charges placed on concrete.*

(a) Charges placed on concrete will not exceed 18 kg and should be placed on the side nearest observers.

(b) Observers must be at least 100 m away in a missile proof shelter, 300 m away in defilade, or 900 m away in the open. An unoccupied distance of 900 m will be provided on the opposite side of the charge where most missile hazards will be thrown.

(3) All personnel will wear approved protective helmets and single hearing protection. Eye protection is recommended.

h. Explosive entry techniques are used in special missions where assault personnel require immediate access to the target. To train for this type mission individuals may be required to be closer to the detonation than authorized by this pamphlet. Such operations will require a deviation in accordance with chapter 1 of this pamphlet.

17–2. Firing devices

a. Electrical firing will be used with caution and will be replaced by nonelectric firing systems when the possibility exists of unintentional detonation from extraneous electrical energy sources (for example, power transmission lines, cellular telephones, generators, radios, or any weather conditions that produce static electricity or lightning). Electric blasting circuits must be checked for stray electromagnetic energy by using a test set. Test sets will not detect nontransmitting portable equipment that may be in the vicinity. Therefore, total reliance must not be placed on these detection methods to ensure the safety of personnel. Areas selected for demolition training sites will be surveyed for electromagnetic energy. This survey is an installation responsibility. Areas will be controlled to prevent entry of portable transmitting equipment from the surrounding area. The data in tables 17–4, 17–5, and 17–6 showing transmitter and radiative power in watts and minimum separation distances to electric blasting operation apply to operation of a radio, radar, and television transmitting equipment.

Table 17–4
Minimum safe distances between RF transmitters and electric blasting operations

Transmitter power (in watts)	Commercial AM broadcast transmitters (in meters)	HF transmitter other than AM broadcast (in meters)
100	229	229
500	229	519
1,000	229	732
4,000	229	1,464
5,000	259	1,678
10,000	397	2,318
25,000	610	3,360
50,000[1]	854	5,185
100,000	1,190	7,320
500,000[2]	2,684	16,755

Notes:
[1] Present maximum power of U.S. broadcast transmitters in commercial AM broadcast frequency range (535 to 1,605 Khz).
[2] Present maximum for international broadcast.

Table 17–5
Minimum safe distances between TV and FM broadcast transmitters and electric blasting operations

Effective radiative power	Channels 2 to 6 and FM	Channels 7 to 13	Uhf
(in watts)	(in meters)		
Up to 1,000	315	229	183
10,000	549	397	183
100,000[1]	976	702	336
316,000[2]	1,312	915	442
1,000,000	1,769	1,220	610
5,000,000[3]	2,745	1,891	915
10,000,000	3,111	2,257	1,068
100,000,000			1,803

Notes:
[1] Present maximum power, channels 2 to 6 and FM
[2] Present maximum power, channels 7 to 13
[3] Present maximum power, channels 14 to 83

Table 17–6
Minimum safe distances between mobile RF transmitters and electric blasting operations

	Minimum safe distances				
Transmitter power	**Medium frequency, 1.6 to 3.4 MHz industrial**	**High frequency, 28 to 29.7 MHz amateur**	**Very high frequency, 35 to 36 MHz; public use, 42 to 44 MHz; public use, 50 to 54 MHz amateur**	**Very high frequency, 144 to 148 MHz; amateur, 150.8 to 161.6 MHz; public use, 222 to 225 MHz amateur**	**Ultrahigh frequency, 420 to 450 MHz; amateur, 450 to 460 MHz public use**
(in watts)	**(in meters)**				
5[1]		2			
10	12	31	12	5	3
50	28	67	28	11	6
100	38	95	40	15	9

Table 17–6
Minimum safe distances between mobile RF transmitters and electric blasting operations—Continued

	Minimum safe distances				
Transmitter power	**Medium frequency, 1.6 to 3.4 MHz industrial**	**High frequency, 28 to 29.7 MHz amateur**	**Very high frequency, 35 to 36 MHz; public use, 42 to 44 MHz; public use, 50 to 54 MHz amateur**	**Very high frequency, 144 to 148 MHz; amateur, 150.8 to 161.6 MHz; public use, 222 to 225 MHz amateur**	**Ultrahigh frequency, 420 to 450 MHz; amateur, 450 to 460 MHz public use**
(in watts)	**(in meters)**				
180[2]				20	
250	61	150	63	23	14
500[3]			89		
600[4]	92	232	96	35	21
1,000[5]	122	290	125	46	28
10,000[6]	382		397		

Notes:
[1] Citizens band radio (walkie-talkie)(26.96 to 27.41) MHz)-minimum safe distance is 1.52 m.
[2] Maximum power for 2-way mobile units if VHF (150.8 to 161.6 MHz range) and for 2-way mobile and fixed-station units in UHF (450 to 460 MHz range).
[3] Maximum power for major VHF 2-way mobile and fixed-station units in 35 to 44 MHz range.
[4] Maximum power for 2-way fixed-station units in VHF (150.8 to 161.1 MHz range).
[5] Maximum power for amateur radio mobile units.
[6] Maximum power for some base stations in 42 to 44 MHz band and 1.8 MHz band.

(1) Electric firing will not be used for demolition training when surveys show that the transmitted field strength exceeds energy levels shown in tables 17–4, 17–5, and 17–6.

(2) For radar transmission near demolition operations, stops will be provided on radar equipment to ensure that the explosives area will not be illuminated by the main beam.

b. Electric firing will not be performed in training within 155 m of energized power transmission lines (69,000 volts or more). When it is necessary to conduct blasting operations at distances closer than 155 m to power transmission lines, nonelectric firing systems will be used or the power transmission lines will be de-energized.

c. Static electricity creates a potential hazard when explosive training operations are being conducted. Possible sources of static electricity will be eliminated, or nonelectric firing systems will be used.

d. Firing devices approved by AMC (for example, M1, M1A1, M3, M5, M122, XM122, M142, and M152) and employed in accordance with Army and Marine Corps FMs and TMS are authorized for use with practice mines. Since these firing devices can be configured with practice and HE activators, care must be taken to ensure the proper activator is assembled to the proper mine. HE activators will not be used with training mines.

e. A dual electric disconnect system will be used when installing electrical firing systems on demolitions. The main source of power will be turned off and a lockout device will be used.

17–3. Shaped charges

a. Shaped charges will be oriented so that gas jets will be directed toward the target. Charges should be placed on the side of the target nearest observers when practicable so that the blast is directed away from observers. Observers will be at least 275 m in defilade from shaped charges when fired, 100 m away in a missile proof shelter, or 1,000 m for unprotected personnel.

b. All personnel will wear approved protective helmets, flak vest and single hearing protection. Eye protection should be worn.

c. The MK47, demolition shaped charge, Mod 1, requires a safe separation distance of 300 m for protected personnel. For unprotected personnel, the stand off distance is 1,610 m. This distance is associated with the effects of nuclear weapon destruction and is not part of the SDZ.

17–4. Bangalore torpedoes

a. Bangalore torpedoes will be fired only in a horizontal position on the ground. Personnel will be in a missile-proof shelter 100 m from the charge, or 200 m away in defilade. For unprotected personnel in the open, the minimum safe distance (MSD) is 1,000 meters at right angles to axis of the bangalore torpedo, 200 meters for personnel in the line of axis. If a field expedient bangalore torpedo, in which the explosive weight exceeds the standard, is used against a steel target, fragments (missiles) could be produced that may fly further than the MSD. Prior to construction and use of a field expedient bangalore torpedo, an SDZ will be developed per FM 5–250 and this pamphlet. This SDZ must be approved by the installation range control officer.

b. All personnel will wear approved protective helmets, flak vest, and single hearing protection. Eye protection should be worn.

17–5. Mine-clearing snakes

a. When firing the M2A1, M3, or M157 demolition snakes, personnel not protected from fragments will not be allowed in front of the snake or in an area 400 m to the rear and 900 m on each side. Personnel in foxholes or with equivalent protection from missiles may be allowed in the area at least 230 m away from the snake in all directions except forward of the missile. In front of the missile path, personnel must be clear of the SDZ.

b. All personnel will wear approved protective helmets, flak vest and single hearing protection. Eye protection should be worn.

c. When firing the M1 antipersonnel mine-clearing snake/M1 antipersonnel mine-clearing detonating cable—

(1) No personnel should be forward of the initial location of the tail. Those firing the snake should take cover in a prone position at least 80 m behind the tail.

(2) All personnel will wear approved protective helmets, flak vest and single hearing protection.

17–6. Blast-driven earth rod

a. Unprotected personnel will be at least 100 m from the rod, or in a missile-proof shelter 50 m away because of potential rupture of the demolition confinement structure of the rod. No explosives other than the standard issue propelling charge will be used in the structure. The structure should be examined carefully before each firing for any evidence of cracking, bulging, or other defects.

b. All personnel will wear approved protective helmets, flak vest, and single hearing protection. Eye protection should be worn.

17–7. Mine-clearing line charge

a. Firing conditions.

(1) Because of high exhaust temperatures, the mine-clearing line charge will not be towed behind an M1 tank.

(2) Spectators will not be allowed within the mine-clearing line charge SDZ or noise hazard contour during firing.

(3) Only firing personnel are allowed within area *F*. Such personnel will be in an armored vehicle in a button-up mode with approved single hearing protection.

(4) The M68 inert charge should not be fired more than three times as additional firings may result in breakage of charge blocks and erratic flight of the rocket.

(5) When firing the M154 Kit, all AAV hatches will be closed (Marine Corps).

b. SDZ.

(1) SDZ requirements for firing the mine-clearing line with M58 HE charge are provided in figures 17–1 and 17–2.

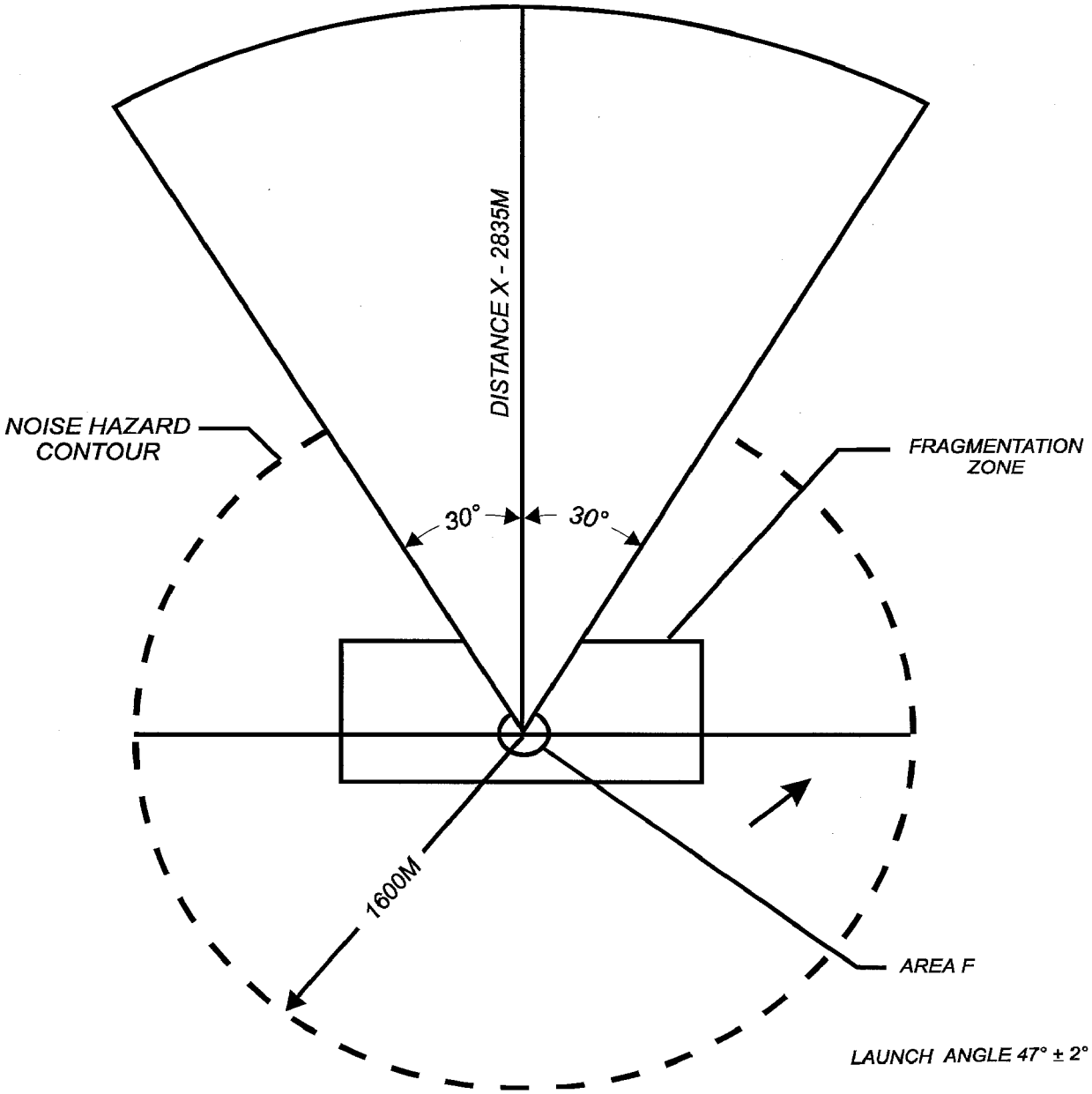

Figure 17–1. SDZ for firing mine-clearing line charge with the M58 HE charge

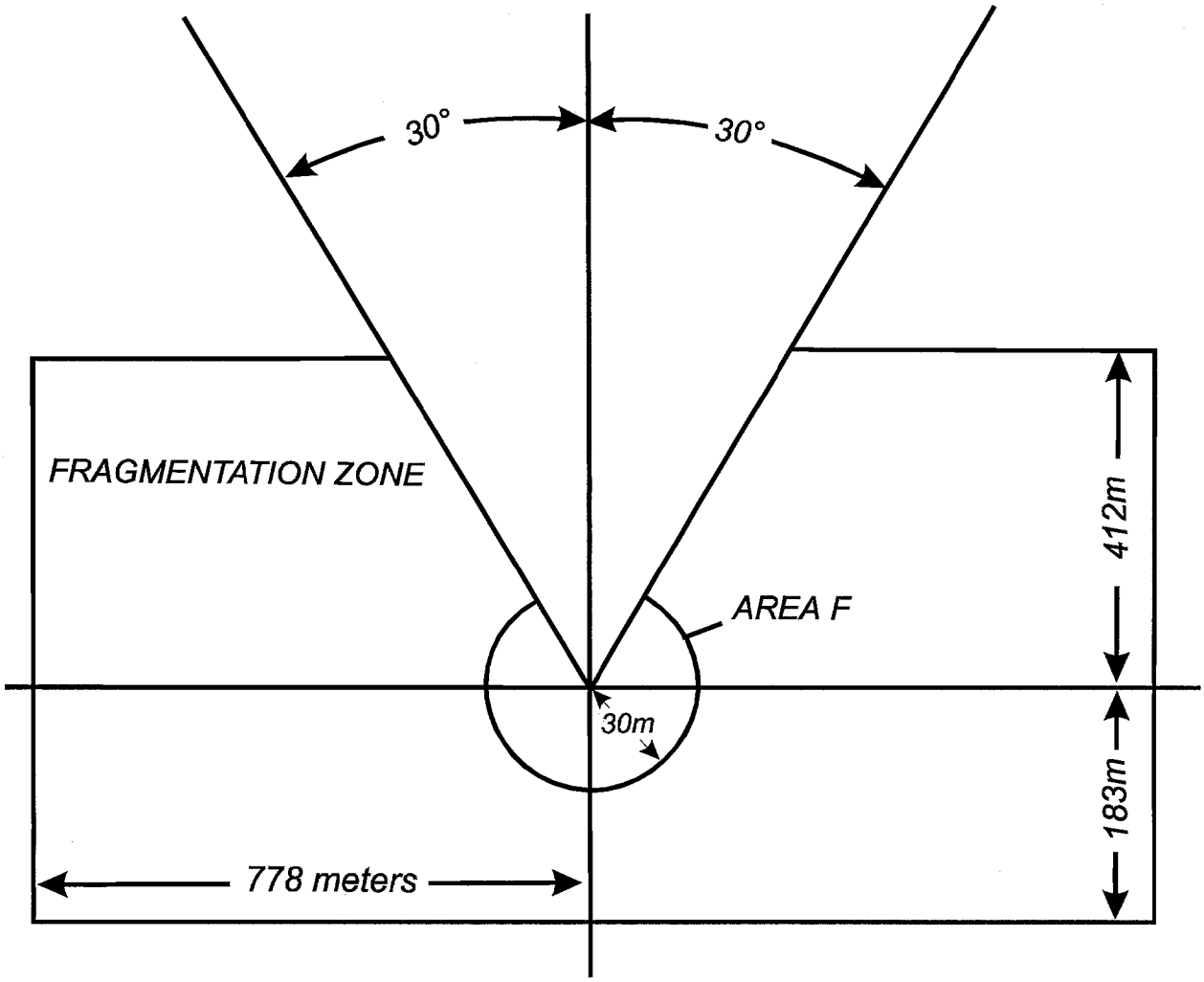

Figure 17–2. SDZ, area *F*, and fragmentation zone for firing mine-clearing line charge with M58 HE charge

(2) The SDZ requirements for firing the mine-clearing line charge with M68 inert charge are provided in figure 17–3.

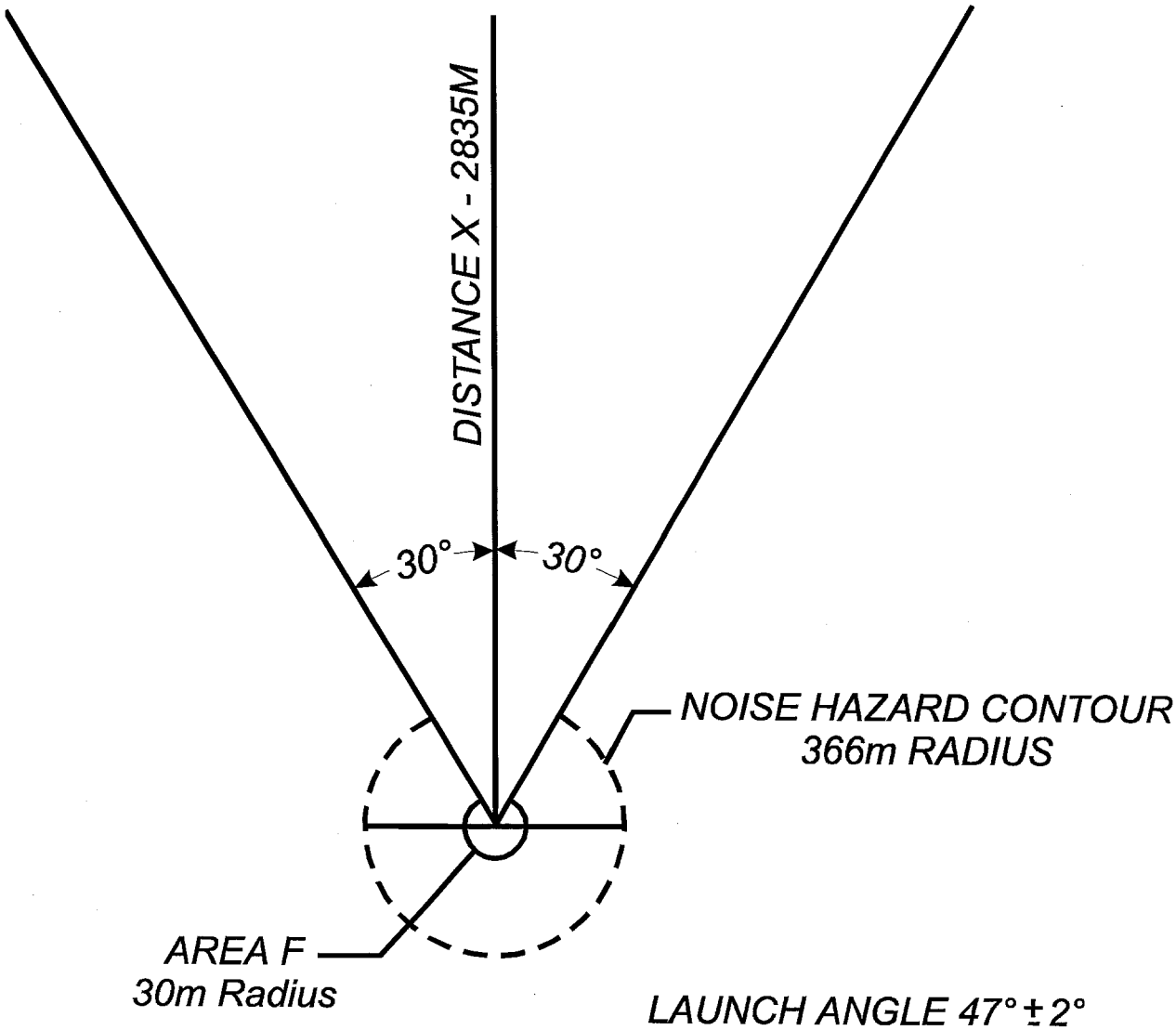

Figure 17–3. SDZ for firing mine-clearing line charge with the M68 inert charge

(3) Distance *X* takes into account the most probable event of charge or cable separation or an unrestrained rocket motor impacting downrange.

(4) If the detonation command link severs during a charge or cable separation, detonation of the HE charge will not occur.

(5) The fragmentation zone required for the HE charge is for containment of fragments and debris of a normal mine-clearing line charge impact.

(6) Mine-clearing line charges will not be destroyed by burning. They contain booster charges that detonate when exposed to heat or pressure. Misfired or dud line charges will be destroyed by EOD personnel only after all misfire procedures have been performed by the firing unit.

17–8. Cratering charges

a. The maximum charge to be fired in training will not exceed 145 kg.

b. MSD for personnel not in missile proof shelters will depend on the net explosive weight of explosive used. MSD for up to 2 kg is 100 m; for up to 30 kg, 300 m; over 30 kg, 500 m. All personnel will wear approved protective helmets, flak vest, and single hearing protection. Eye protection should be worn. Missile-proof shelters, if strong

enough to withstand any material propelled onto it by the detonation and located not fewer than 100 m from the detonation site, may be occupied by personnel.

c. All cratering charges will be dual primed with detonating cord. Blasting caps will not be placed underground. Electric or nonelectric caps will be attached to the detonating cord above ground.

17–9. Mines

a. Practice and inert mines will be color coded in accordance with MIL STD–709A and TM 9–1300–200, paragraph 8–6, and will have the appropriate identification marking stenciled on them. Service, practice, and inert mines and fuzes will not be mixed.

(1) Inert mines and mine fuzes do not present a safety hazard. They will be color coded and marked in accordance with MIL STD–709C to prevent mixing with practice and HE mines.

(2) Practice mines and their fuzes contain a small, low explosive charge or a smoke producing increment. They will be color coded in accordance with MIL STD–709A.

b. Live mine training (individual training) is authorized with the M15 antitank mine, M19 antitank mine, and the M21 antitank mine.

(1) Do not arm and disarm any mine more than 25 times.

(2) Do not use trip wires, antihandling devices, or booby traps, or bury live mines.

(3) Do not use tilt rods with live mines.

(4) Do not conduct live mine and simulator training at the same time and location. This will prevent a live mine from being mistaken for an inert mine.

(5) Procedures in FM 20–32 will be followed.

(6) Flak vests will be worn in addition to approved protective helmets.

(7) Live mines will not be camouflaged during training.

(8) Training with nonself-destructing antipersonnel mines (APs) is prohibited unless approved by Chief of Staff, U.S. Army, or the Commandant of the Marine Corps. When training with nonself-destructing APs is authorized, the following additional restrictions apply:

(a) No training with live M14 mines.

(b) No training with the M16 APs without the positive safety pin remaining in the M605 fuze.

(c) Do not use pre-1957 M605 fuzes with the M16 AP in training.

c. Live mine firing demonstrations show mine characteristics, capabilities, and effects.

(1) Demonstrations must be authorized by the installation commander. This requires that a risk management plan be developed by the using unit and coordinated through the installation range control and safety office.

(2) Personnel conducting demonstrations must be proficient in all safety and technical aspects pertaining to the live mine demonstration.

(3) Procedures in FM 20–32 (section on live mine demonstrations) must be followed.

(4) The M15 AT, M19 AT, and M21 AT mines are authorized for demonstrations.

(5) The MSDs for personnel in the open is 300 m for the M14 and M16 AP (when authorized) mines and 1,000 m for the M15, M19, and M21 AT mines.

(6) The MSD for personnel in missile proof shelters (capable of withstanding blast and missiles produced by the blast) is 100 m for all five types of mines.

(7) Only personnel arming the charges will be downrange during the arming process. Spectators and observers will remain at a safe distance (or in a missile-proof shelter) until the demonstration is completed and the area has been declared safe to move downrange to view the effects.

(8) Personnel preparing the demonstration (setting the charges) will wear flak vests and approved protective helmets.

d. Claymore antipersonnel mines will be operated under the following conditions:

(1) Firing conditions.

(a) Range OIC will ensure mines are installed correctly and facing into the impact area.

(b) All mines will be secured until the range OIC directs their issue.

(c) Emplaced mines will not be disarmed except by order of the range OIC.

(d) Firing devices will only be connected at the command of the range OIC.

(e) When more than one mine is to be fired, the range OIC will ensure that previous firings have not dislodged the other mines in the impact area.

(f) After firing, the impact area will be inspected to ensure that all mines have detonated.

(g) Misfires will be handled in accordance with FM 23–23.

(2) SDZ.

(a) SDZ requirements for firing the M18 and M18A1 Claymore mine are provided in figure 17–4.

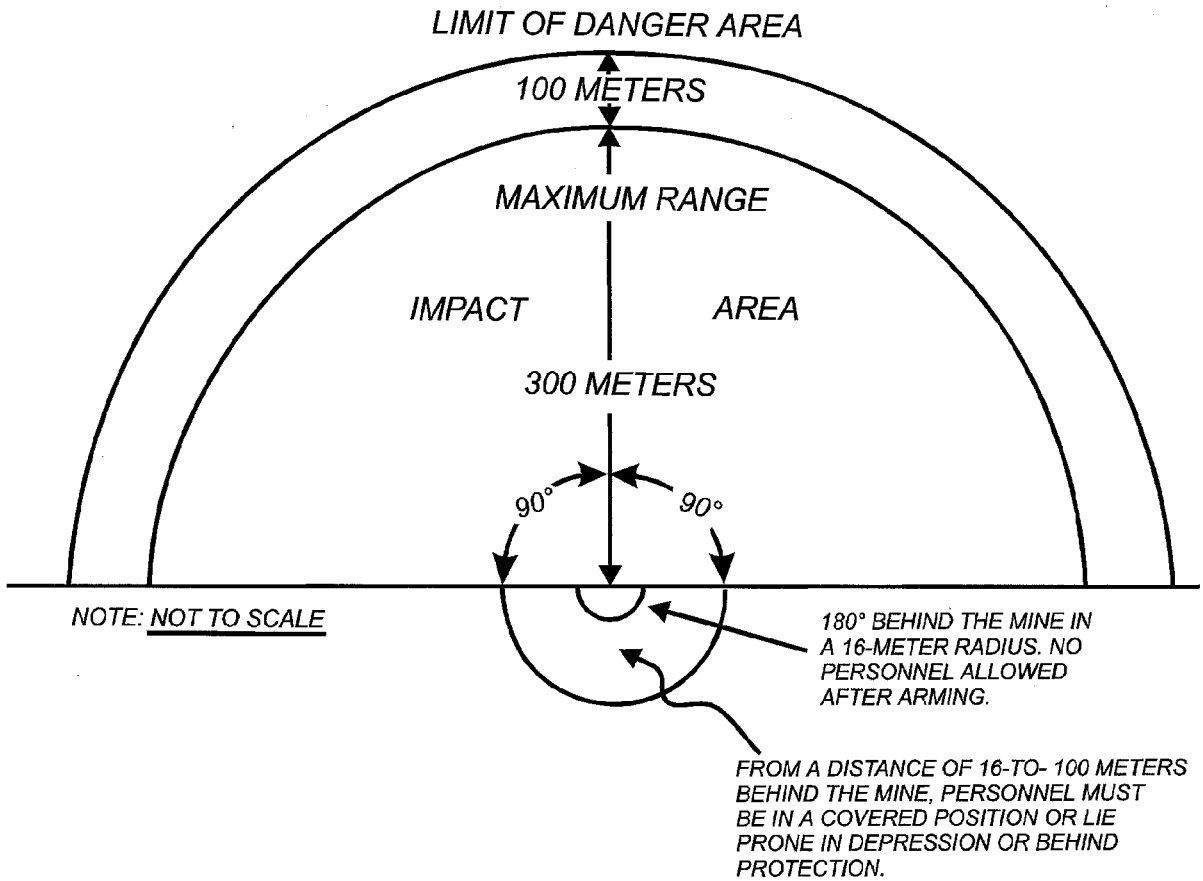

Note:
When the mine is tied to a tree or fired in some other area where the secondary missile hazard attenuates the blast, friendly troops in 16- to 50-m radius behind the mine must be in a covered position.

Figure 17–4. SDZ for firing Claymore mines

(b) Care must be exercised when installing mines to prevent the creation of secondary fragment and debris hazards.

(c) Personnel will not be allowed within 16 meters to the rear of the mine. Firing personnel may occupy an area between 16 and 100 m to the rear of the mine if they are located in a covered position, lying prone in a depression, or behind a physical barrier. All personnel will wear approved protective helmets, flak vest and single hearing protection. Eye protection should be worn.

e. Volcano multiple delivery mine system is a rapid mine dispensing system for launching antitank mines from various vehicles. The air system uses UH–60 helicopters. SDZ requirements for the air system are shown in figure 17–5. SDZ for the air system is dependent upon aircraft speed, altitude, and the dispenser control setting. The ground system uses 5-ton cargo or dump truck. SDZ requirements for the ground system are shown in figure 17–6.

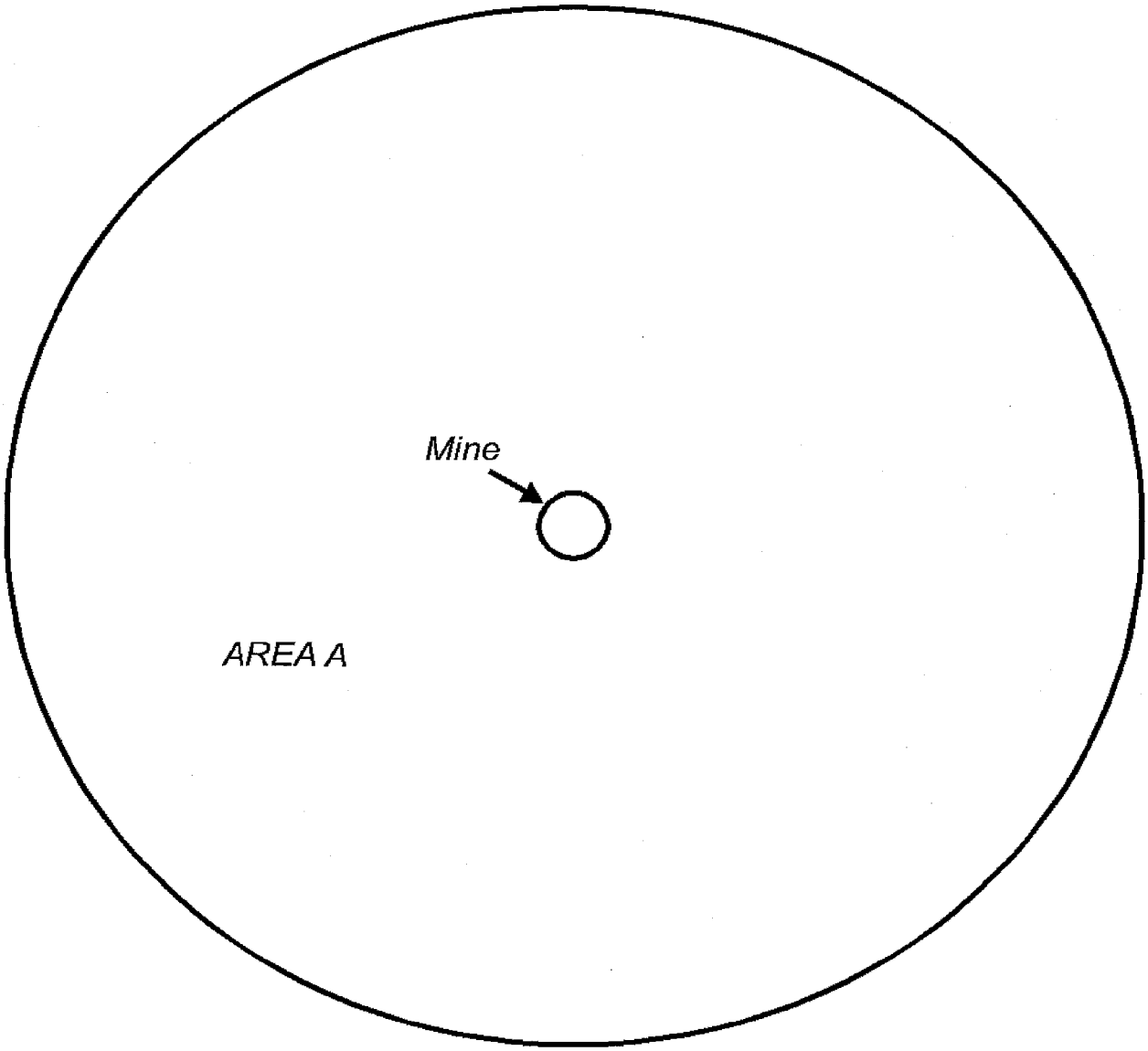

	Area A
Mine, AP	274m
Mine, AT	640m

Figure 17–5. Air-volcano SDZ

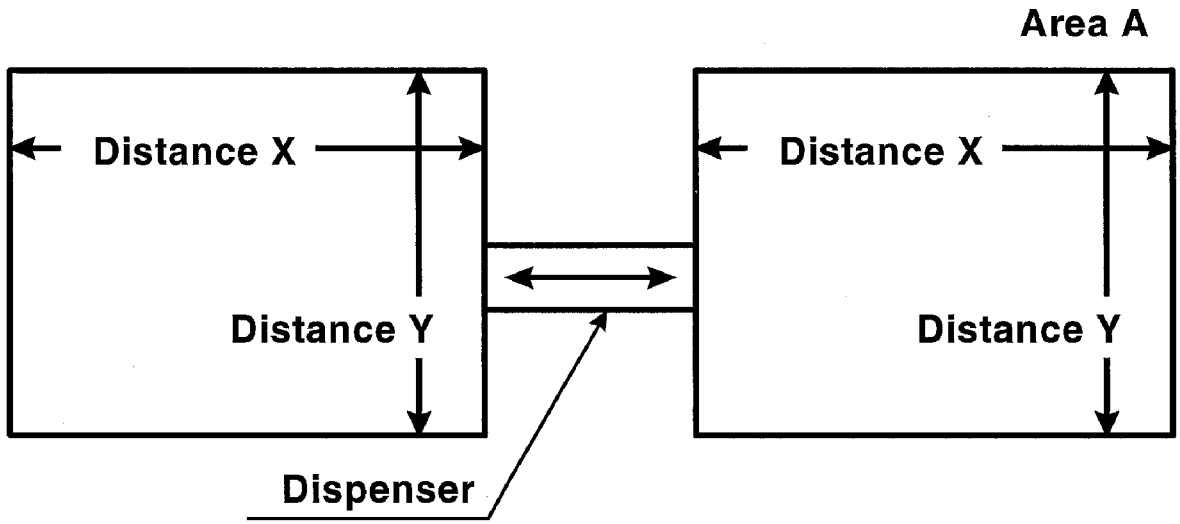

M139 w/	X	Y	Area A
M87	100m	25m	640m
M88	100m	25m	0m
M89	100m	25m	0m

Figure 17–6. Volcano dispenser SDZ ground

17–10. Firing devices

a. Instructions in TM 9–1375–213–12 will be followed when installing, arming, and disarming firing devices.

b. Firing devices and fuzes either with or without the standard bases will not be pointed at personnel.

c. Standard bases containing unfired percussion caps, firing devices, and fuzes will not be carried in the pocket.

d. Standard bases containing unfired percussion caps will be kept separated from firing devices and fuzes until the firing device or fuze is ready to be installed in the mine or booby trap.

e. Safety pins on firing devices and fuzes should be checked for ease of movement before attaching the standard base. The safety pins for locking and positive safeties should easily move.

f. Before removing the tripwire, the positive safety will be installed on armed firing devices or fuzes having a tripwire attached.

g. The assembly, arming, and disarming of antipersonnel mine fuze M605 will be in accordance with TM 9–1345–203–12.

17–11. Trip flares, M48, and M49

a. Use inert flares to instruct students in the use, emplacement, and fuzing of service flares.

b. Fence or guard each service trip flare used in training to prevent personnel from approaching within 2 m of the emplaced flare.

c. Clear trip flare firing positions of flammable material to prevent accidental fires. Do not use the M48 trip flare in areas where fire could cause serious damage.

17–12. Simulators

a. M80 explosive simulators detonate 3 to 5 seconds after ignition of the fuse cord and are capable of causing serious injury. Fuse cord tips should not be split since this reduces burning time and increases the potential for injury to personnel. Do not use M1 and M2 type fuse igniters to ignite the M80 fuse cord or hold the M80 simulator when ignited.

b. Procedures for the safe use of other simulators are contained in TM 9–1370–206–10, TM 9–1370–207–10, and TM 9–1370–208–10. No attempt will be made to disarm or disassemble simulators.

c. See TM 9–1370–207–10 for atomic explosion simulator M142 firing precautions.

d. Commercially manufactured fireworks (designated for civilian use) will not be handled, stored, or used in any way by military personnel on an installation.

e. When explosive charges (TNT blocks or composition C4) are used to simulate detonation of mines and incoming artillery projectiles, mortars, and bombs during exercises or on the infiltration course, the following procedures will be used.

(1) Charges will be fired in specially prepared detonation pits with the charge positioned in the center of the pit. See paragraph 17–12*e*(8) for demolition pit requirements.

(2) Only charges of standard issue TNT blocks or composition C4 of one-quarter pound will be used. Composition C4 may be cut into ¼-pound blocks. TNT blocks will be cut in accordance with the instructions in the corresponding TM.

(3) Charges will be detonated electrically from a position that allows a clear view of the pit and the immediate vicinity. Follow safety precautions in paragraph 17–2 and tables 17–4 through 17–6 when using electric blasting caps and circuits.

(4) Blasting circuit wires leading to charges in the detonation pits will be buried, preferably in conduit, or otherwise secured to prevent personnel from becoming entangled in or tripping over the wires.

(5) Only one charge will be emplaced in a pit at a time.

(6) Pits will be inspected and cleared of objects prior to emplacing charges to remove potential hazardous missiles.

(7) Charges may only be detonated when crawling personnel are 3 meters or more from the center of the pit, and erect personnel are 25 m or more from the pit.

(8) Detonation pits will be constructed in the following manner.

(a) Pits will be excavated in the shape of a cone at least 1.5 m in diameter by 0.6 m deep. Excavated pits will be back filled 0.3 m with clean, clay-free sand that has passed through a #10 screen. Any object larger than sand grain size is considered a pebble. Pits will be free draining so that the sand filled area will quickly drain clear of water. Soil conditions may require that drains be constructed.

(b) A ring of sandbags or other suitable barrier material (for example, treated timbers) 0.6 m high with an inside diameter of 2 m will be constructed around each pit. Construct a barrier at least 1 meter outside of the sandbag rings that does not project above the top of the sandbags. These detonation pit barriers will be physically different from any other barrier which personnel are expected to negotiate, and will be sufficient to keep personnel 1 m away from the detonation pits.

(c) Dimensions given above for detonation pits and sandbag rings with barriers are minimum requirements and will not survive extensive use without frequent maintenance. Larger diameters and depths, as well as double walled sandbag rings, are recommended for detonation pits used more than once a week.

(d) A dual electrical disconnect system will be used when charges are being placed in the pits. The main source of power will be turned off by the individual placing the charge in the pit. Once the power is turned off, a lockout device will be used.

f. Demolitions effects simulators (DES) charges are explosives which use detonating cord, blasting caps, MDI, cardboard, and sand or chalk to simulate other explosives. Extreme care must be exercised when using DES. Use of DES is described in TC 5–250. DES is an explosive, and all safety guidance contained in this pamphlet and FM 5–250 must be followed. All procedures and MSDs for the charge that is simulated must be followed. For example, a DES bangalore torpedo would require the same MSDs and procedures for an actual bangalore torpedo. All demolitions effects simulators must be marked as DES.

17–13. Training conducted in explosive entry techniques (USMC)

a. Explosive entry techniques are used in special missions where assault personnel require immediate access to the target. To train for this mission, individuals must be closer to the detonation than is authorized elsewhere in this chapter. Because of the unique character and requirements of this training, the following special safety guidelines are established to support this training on Marine Corps installations.

(1) Stand-off distance for personnel will be determined using the formula $D = K \times W^{1/3}$ where D = distance, K = a constant (the K factor for explosive entry techniques is set at 18), and the $W^{1/3}$ = cube root of weight of the explosives in kilograms. This is the limit at which the possibility of eardrum damage is less than 1 percent. This standoff is related to blast pressure and does not reflect fragmentation damage. When a barrier is used, the safe over-pressure standoff distance may be divided by 2.

(2) Fragmentation standoff will equal the blast standoff when a protective barrier is provided between the explosive and the personnel. This barrier may be in the form of wood, cement, metal, or a ballistic blanket barrier. The barrier must be able to absorb all fragmentation.

(3) All personnel within the fragmentation distance of a detonation will wear appropriate protective gear: helmet, body armor, eye protection, and hearing protection. Marines conducting the detonation will also wear: fire resistant hoods, coveralls, and gloves. Clothing with short sleeves is not authorized when conducting this training.

b. SDZs for ranges dedicated to the conduct of explosives entry techniques will be set and approved by CG, MCCDC (C46R).

Chapter 18
Laser Range Safety

18–1. Fundamentals

The fundamental concept of laser range safety is to prevent direct and collateral injury or damage resulting from laser use. Personnel using or supervising the use of lasers must be thoroughly familiar with all aspects of laser operations and associated dangers. The following guidelines will be used in conjunction with the guidance provided in referenced publications when employing lasers.

a. MIL–HDBK–828A and Joint Pub 3–09.1 are definitive guidance for laser operations, characteristics, and general procedures. MIL–HDBK–828A may be ordered from the following address: Standardization Documents Order Desk, Bldg 4D, 700 Robbins Avenue, Philadelphia, PA 19111–5094.

b. Tactical lasers will be treated as direct-fire weapons. Precautions associated with direct-fire weapons will be applied to all lasers operated on military ranges.

c. RCOs will establish boundaries for laser range operations and strictly control laser use in training to conform to the provisions of this pamphlet and applicable TMs. Deviations may be approved after applying risk management techniques, minimizing hazards, and accepting the residual risk at the appropriate command level. Reduced SDZs for lasers terminated within the range boundary do not require deviation.

d. AR 11–9, AR 40–5, and MCO 5104.1 outline general laser radiation safety requirements. A laser safety orientation will be given to all personnel who use or work with laser devices to include an explanation of hazards and safety requirements before they commence laser operations.

e. Personnel suspected of experiencing potentially damaging eye exposure from laser radiation will be evacuated immediately to the nearest medical facility and undergo an eye examination. Pertinent medical guidance for such emergencies is available from the Walter Reed Army Institute of Research Detachment at Brooks Air Force Base, or through the Army Eye Injury Hotline at 1–800–473–3549. The expeditious examination and treatment of laser eye injuries is critical in minimizing loss of visual acuity.

f. Intrabeam viewing of either direct or reflected beams from a flat mirror-like (specular) surface from lasers can expose the unprotected eye to a potential hazard and must be prevented. Flat specular surfaces will be removed from all targets designated as laser targets prior to engagement. Remove all specular surfaces from around the target to the distance required by area *S*. If it is not feasible to remove all specular surfaces from the target, these surfaces must be covered with a diffuse material prior to use as a target.

g. Report laser overexposure incidents in accordance with AR 11–9, AR 40–5, AR 385–40, and TB Med 524 (Army) or MCO 5104.1 and NAVMEDCOMINST 6470.2 (Marine Corps).

h. Personnel will not deliberately view direct laser radiation with optical instruments within NOHD–O and NOHD–M unless optical devices are considered “laser safe” for the type of laser being used. The resulting amplification of laser energy significantly increases the probability of eye injury.

i. Night vision devices will not be used for laser eye protection. These devices are not “cover-all” goggles. Laser energy may enter the eye from reflections or from around the tubes. These devices can be bloomed (white out), damaged, or destroyed from exposure to laser radiation.

j. Dazzle or momentary flash blindness can occur from visible laser exposures below maximum permissible exposure levels. Laser eye protection may not attenuate the radiation sufficiently to eliminate these effects. Appropriate precautions will be taken if personnel performing critical tasks, such as flying aircraft, may be exposed to laser radiation levels that may cause dazzle or momentary flash blindness.

k. Laser-guided munitions and other laser detectors may unintentionally acquire radiation sources within the field of detection other than the target. Fields of detection vary and are specific to individual weapons and detectors or sensors. Training will be planned to ensure that the angle between the laser designator line of sight and laser detectors (for example, laser-guided munitions, laser-spot tracker) will not allow the munitions to impact on the laser source or scattered radiation from the laser platform.

l. Extreme caution will be taken when using a target-designating laser in conjunction with ordnance delivery aircraft.

The potential exists for the on-board laser seeker to lock onto the designator or its radiated energy (that is, beam or reflected beam) instead of the target. The following procedures will be followed to reduce this risk.

(1) The pilot of the attacking aircraft will have positive knowledge of the location of the designator and the target area before releasing munitions.

(2) Approach paths will be designated and briefed to both the designating and forward air controller personnel and the aircrews prior to conducting the mission. Aircraft approach paths will be planned to preclude crossing laser designator beams with the laser seeker. The laser seeker should intersect the designator beam well forward of the laser firing point, angling toward the target.

(3) Only mission-essential personnel will be within the area of effects for the weapon employed from the designator or direct or reflected beam of the laser designator during operations.

(4) Munitions will not be launched or released on a heading toward the laser designator. See applicable TMs for recommended employment procedures.

18–2. Range usage

a. Laser devices will be used only on ranges approved for such use. Evaluation requirements for laser ranges are in MIL–HDBK–828A.

b. Practice in lasing with unfiltered class 2, 3, 3b, 4, or military exempt lasers (that is, use of only the lasing device) during nonlive firing exercises in training areas may be conducted only at installation training complexes that meet safety requirements and have been certified for such practice by a service approved agency and approved by the installation commander.

c. A survey of the proposed lasing and target area will be accomplished to determine laser elevation and azimuth limits within the SDZ. Laser targets will not be located on the skyline (above a backstop). Restrictions will be applied to prevent lasing above the target line. Existing range limit markers may be used if they provide an adequate margin of safety.

d. Unprotected personnel will not be permitted in established laser impact areas as shown in the SDZ for the range. Installation commanders may authorize deviation after applying risk assessment procedures, reducing hazards and accepting residual risks at the appropriate command level.

e. Range control officers will be familiar with the tactics and technical aspects of all laser devices used on ranges under their control. Weapons employment may seriously affect range safety analysis. It is essential that the range safety officer and range control officer understand the details of proposed employment tactics. The following are examples of tactics that can affect range safety.

(1) Computer bombing systems often use target designation laser range finder capability to perform computer-controlled auto-release of weapons. For the Marine Corps, a night targeting system is mounted on the AH–1W Cobra helicopter and must range the ground prior to target to compute the release point. Selected aircraft such as F–15Es and F–16s may use LANTRIN lasers to range the ground during constant-computing impact point operations as much as 1.61 km short of the actual target to compute the bomb release point. This area short of the target must be included in the laser hazard area and cleared of specular reflectors.

(2) Laser-guided munitions delivery tactics may involve two separate lasing operations. The designation laser may be used for target identification and ranging. After bomb release, the delivery aircraft may turn away from the target before turning on the laser designator to guide the weapon to the target. The incident angle of the laser may be off set as much as 90° from the initial aircraft heading.

18–3. Force on Force tactical exercises

a. Exercises involving MILES, AGES, or AD do not require SDZ construction, however NOHD restrictions in MIL–HDBK–828A apply. Tactical exercises involving force-on-force components using laser devices other than MILES, AGES, or AD may be approved by the installation commander. Available sources of technical information include the following agencies:

(1) U.S. Army Center for Health Promotion and Preventive Medicine (USACHPPM) Laser/Optical Radiation Program Manager.

(2) Army Radiation Safety Officer, HQDA (DACS–SF).

(3) Commandant of the Marine Corps, Laser Safety Review Board (Code SD).

b. Laser devices or arrays not approved by the above agencies will not be used in force-on-force tactical exercises.

Chapter 19
Live-Fire Exercises

19–1. Safety during live-fire exercises

a. Live-fire phases of training exercises must be conducted with maximum realism and safety. If safety or terrain limitations do require some unrealistic actions to be taken, personnel should be briefed, in detail, on why artificial actions are required and what the unit would do if confronted with a similar situation in combat.

b. CALFEX (Army)/Combined Arms Exercise (CAX) (Marine Corps) involve the participation of two or more combat arms and/or Department of Defense (DOD) services. Air and ground weapons will be used in accordance with current doctrine unless specifically prohibited from use by this pamphlet. Because of the dangers and complexities associated with CALFEXs/CAXs, commanders will thoroughly review training scenarios (scheme of maneuver and fire support) and ensure close coordination among participants. Commanders will apply risk management to all aspects of the CALFEX/CAX.

19–2. Information for commanders

a. Training to permit highly realistic maneuvers and LFXs involves specific personnel safety requirements. Installation commanders will publish specific range guidance (for example, range regulations, SOPs, and so forth) that apply specifically to their installations. This guidance will define safety requirements to support live-fire training exercises. Directives developed for a particular location are not authorized for use at a different location.

b. Commanders whose units participate in live-fire exercises will—

(1) Make certain that all individual gunners including Bradley, tank, and aviation gunners who will take part in live-fire exercises have fired and passed a qualification course for the weapon or system they will fire in the exercise.

(2) Conduct rehearsal (dry run) exercises prior to the live-fire and maneuver exercise. The commander will assess the proficiency and experience level of his/her unit and the degree of risk involved to determine the scope and duration of the rehearsal and if it should be executed on the same range on which the live-fire and maneuver training will be conducted. The rehearsal should be scheduled as close to the actual event as is feasible to retain individual situational awareness and skills. Additionally, whenever feasible, rehearsals will replicate as closely as possible the conditions involved in the actual event. Such conditions should include but are not limited to time of day, similar terrain, and the status of the personnel (that is uniforms worn, same equipment carried, and camouflage). In addition, rehearsals will include a review of range safety requirements for the live five and maneuver range. The review should include but is not limited to range safety fans (lateral limits), SDZs for weapons and ammunition fired, air limitations and restrictions both for live-fire and medical evacuation, and emergency and or casualty evacuation procedures. Commander, USASOC, may approve deviation from this requirement for Army Special Forces (ARSOF) units. If ARSOF units are training on a non-USASOC installation, host installation commander concurrence is required.

(3) Orient participants on the capabilities of the weapons used by other components in the CALFEX/CAX.

(4) Designate individuals (such as observer-controllers) who are not part of the tactical or administrative scheme to monitor safety. These individuals will maintain visual contact with maneuvering elements and should have some means of signaling a cease-fire. Communications with the tactical operations center is mandatory. The Marine Corps commander will assess the proficiency and experience level of his/her unit in determining the quantity of observers-controllers (that is, safety NCOs) required for the event. Other factors influencing this decision should include but are not limited to, the scheme of maneuver, geometry of the attack, composition of forces, dispersion of forces, visibility, weather conditions, and fatigue. Marine Corps observers-controllers report to the exercise range safety officer, and will have training in local range safety procedures.

c. For battalion and squadron or larger exercises, a field grade officer will be appointed as the exercise OIC.

19–3. Exercise planning

a. Units will conduct live-fire exercises only in support of properly identified and trained-to-standards mission-essential task list (METL) tasks. Tactics, techniques, and procedures employed during the live-fire exercises must be consistent with the standards published in the applicable Army Training Evaulation Program mission training plan and or battle drills. Command approval from the next higher command is required for any life-fire exercise not consistent with the unit's established METL.

b. Detailed written plans will be developed between the range control officer and the unit OIC. It will require submission of formal risk management documentation prior to execution. If residual risk is extremely high, MACOM commander approval is required. The installation safety director will review the completed plan and risk management documentation that will include:

(1) A detailed plan of maneuver and fire support.

(2) A list of weapons, ammunition, pyrotechnic or smokes, and chemicals to be used.

(3) Unit control measures, including means of communication.

(4) Terrain feature and facilities required.

c. Impact distance and limits of advance are as follows:

(1) The distances to which unprotected troops can safely move near the impact area (that is, areas *A*, *B* and *C*) are indicated in the chapter on each weapon or weapons system.

(2) To determine how close unprotected troops may maneuver to the target area, an impact area and an SDZ must be established for each target area used. SDZs must be computed and issued to leaders and safety personnel before starting the exercise. When several types of weapons are being fired into one target area, the combined total SDZ (composite SDZ) will govern. These restrictions normally should not preclude unit commanders from selecting tactically sound supporting weapon positions for their scheme of maneuver, provided the positions and directions of fire do not exceed the total range area available for the exercise. When feasible, leaders and safety personnel will be shown the physical limits of the SDZ by ground survey.

(3) The short limit of the impact area may be moved in the direction of the target area by definite prearrangement to permit forward movement of troops.

(4) Demolitions may be used during live-fire exercises according to chapter 17.

(5) Selection of weapon positions will be the responsibility of unit leaders taking part in the exercise.

(6) Terrain configuration will be used to enhance safety features when terrain is being selected for live-fire exercises involving overhead, flanking fire, or both.

d. During live-fire exercise planning, the risk management process must address possible hazards from friendly fire and control measures to reduce or eliminate them, while executing the METL task to published Army/Marine Corps standards.

19–4. Firing precautions

a. Overhead fire of personnel may be authorized, provided they have positive protection from the munitions being fired. Protected positions for personnel and vehicles are discussed in FM 5–103.

b. The installation commander (or designated representative) can authorize overhead fire above unprotected personnel except by weapon systems specifically prohibited.

c. Weapons specifically authorized for overhead fire of unprotected personnel are—

(1) All artillery cannon firing indirect fire. See chapter 11 for safety precautions.

(2) Machine-guns (5.56 mm, 7.62 mm, and .50 caliber) on ground tripods or vehicle mounts (ring mounts excluded) firing from a stationary position.

d. Only ammunition approved for overhead fire will be used.

e. All firing of direct fire weapons will be from positions that provide an unobstructed field of fire.

f. Overhead fire with machineguns in live-fire exercises will be as follows:

(1) Bullets will not be permitted to impact between the firing position and the rear of the line of unprotected personnel. All impacts should be a minimum of 50 meters beyond the forward line of unprotected personnel.

(2) Positive stops must be used to prevent crossfire and depression of the muzzle during firing.

(3) A minimum clearance or safety limit must be established using the guidelines for overhead fire in FM 23–65 and FM 3–22.68. Marine Corps personnel use Marine Corps Warfighting Publication 3–15.1.

(4) Rate of fire will not exceed 70 rounds per minute for 5.56-mm and 7.62-mm machineguns and 40 rounds per minute for .50 caliber machineguns.

(5) Weapons will be test fired before delivery of overhead fire to verify effectiveness of the positive traverse and depression stops.

(6) Tracer ammunition may be used as a check to track the projectile flight path.

g. In addition to f above, the following precautions will apply to overhead fire with machineguns for a confidence infiltration course.

(1) Firing will be from approved platforms as described in FM 21–75.

(2) Qualified field maintenance personnel will inspect the mounts and weapons before being declared safe to deliver overhead fire.

(3) A minimum clearance of 2.5 m over the heads of personnel or the highest obstruction within the field of fire will be maintained. Minimum clearance is the distance between the lowest shot in the dispersion pattern (as determined by the test firing) and the bodies of individuals in erect positions on the highest point of ground, log, or other obstacle over which personnel must travel, or heights of barbed wire strands or posts on the course, whichever is higher.

h. All firing of indirect fire weapons will be from positions in which the site to mask allows engagement of the targets nearest to the forward line of troops. Selection of firing positions, direction of fire, and fall of shot must prevent the projectiles from striking trees or other obstacles in the area from the weapon position to a point forward of unprotected personnel. The forward point is defined as the bursting radius of the round, plus 12 probable errors.

i. When field artillery is fired during CALFEX/CAX with maneuvering personnel, the impact area will be adjusted according to the maneuver location of troops to maintain safe separation distance. The troop side of the impact area will be determined in relation to the movement of the personnel. Unprotected troops must not be permitted to enter SDZ areas *A*, *B*, *C*, and *E* after firing has commenced.

j. Weapons will be grouped by muzzle velocity as cited in FM 6–40 or pertinent Marine Corps TMs. Weapons will

be bore-sighted as prescribed in FM 6–50. Tubes will be clean and dry before start of exercise and will be cleaned during the exercise in accordance with appropriate weapon TMs.

k. All ammunition to be fired should be uniformly conditioned to ambient temperature consistent with the tactical situation.

l. Registration.

(1) At least two rounds should be fired for registration. Targets should be selected in the central portion of the target area. After registration, corrections must be applied to deflection and quadrant elevation limits. If no registration is fired, meteorological and velocity error (MET + VE) corrections will be applied immediately before the exercise starts.

(2) To compensate for drift, in high-angle fire the right deflection limit will be moved to the left by the amount of the maximum drift listed within the range limits for the charges being fired. The left limit will be moved to the right by the amount of the minimum drift listed within the range limits for the charges being fired. To determine the appropriate drift, the tabular firing table and graphical firing scale must be examined and the safer value used. If a drift value is not listed in the tabular firing table or on the graphical firing scale for the ranges to the near and far edge of the target area, the nearest safer value will be used.

m. Overhead fire above unprotected personnel from a moving vehicle or aircraft is prohibited.

n. Cannon and mortar flanking fire must not impact any closer to unprotected personnel than the fragmentation radius (area *A*) prescribed for each weapon.

o. Small arms (5.56 mm, 7.62 mm, and .50 caliber), ground-mounted or vehicle-mounted machineguns may be fired at low angles of elevation (near the flank of an individual or unit.) However, there must be an angle of 15° or more between the limit of fire and the near flank of the closest individual or unit and all impacts are beyond the individual or unit. Traversing and depression stops will be provided on machineguns to maintain the required angle and distance between the line of fire and the near flank of an individual or unit.

p. Range SOPs will address firing and maneuver unit locations to ensure no unprotected personnel are exposed to training fires.

19–5. Fire control

The unit commander makes the final decisions on fire control measures. The following conditions must be met:

a. The ammunition in (1) through (6) below may be authorized for use in live-fire exercises only when it is fired into designated (dedicated high hazard) impact areas through which personnel are not permitted to maneuver.

(1) 40-mm HE.

(2) 66-mm light antitank weapon (HE).

(3) Hand grenades (HE), except as noted in paragraph 19–5*d.*

(4) RAAWS/MAAWS (HE & HEAT).

(5) 25-mm (HE).

(6) M74 66-mm TPA.

b. Final coordination lines must be identified to all participating units.

c. Weapons used in live-fire exercises will be controlled so that SDZ areas (such as *A, B, C, E,* and *F*) do not overlap areas in which unprotected personnel are maneuvering.

d. A range safety officer will directly supervise and control the throwing of fragmentation grenades. The following procedures apply.

(1) Hand fragmentation grenades may be thrown during LFXs. Hand grenades will be carried in accordance with FM 23–30. The fragmentation characteristics of the grenades must be considered and appropriate safety precautions taken to include the following:

(a) Impact areas will be free of obstacles (such as trees, thick vegetation, tank hulls, deep snow, or standing water).

(b) A minimum side-to-side distance of 5 m between each individual during the throwing exercise is required.

(c) Throwing positions will protect the throwers from fragments.

(d) EOD personnel will destroy dud grenades in place or safe and remove before troops enter the grenade impact area. If EOD personnel are unable to locate or destroy any dud grenades, troop maneuver through the impact area is not authorized.

(2) Individuals being transported by vehicle or aircraft will not carry fragmentation, offensive, or white phosphorus grenades attached to web equipment.

19–6. Maneuver in temporary impact areas

a. The installation commander may approve maneuver through temporary impact areas containing unexploded munitions, except those identified in paragraph 19–5a.

b. The installation commander may approve maneuver through temporary impact areas after reviewing a risk assessment and accepting residual risks. The following munitions, although not identified in paragraph 19–5a, may present high or extremely high risk if present.

(1) 20-mm HE.

(2) 30-mm HE.

(3) All HEAT ammunition, because of type of fuze action and sensitivity.

(4) All ordnance fuzed with mechanical time fuzes.

19–7. Air support

a. During live-fire exercises and CAXs the following control measures are required prior to firing aircraft-mounted weapons or dropping air-delivered ordnance.

(1) Positive identification of personnel locations.

(2) Positive identification of the target(s).

(3) Positive clearance to drop/fire ordnance as given by the controlling ground or airborne forward air controller (USMC).

(4) Approved abort procedures and locations to drop unexpended bombs when necessary.

(5) Attack flight paths, location of bomb safety lines, and access corridors will be known and visually verified by ground personnel and participating aircrews.

(6) Direct communications will be established and maintained between the OIC, the forward air controller, and the fire support coordination center that coordinates the direct support artillery fire in the vicinity of an air strike.

(7) Minimize danger to attacking aircraft from ricochet of ground-fired HE projectiles, and ceasing fire of flat trajectory weapons, in the vicinity of air targets under attack within the SDZ (see appendix B for vertical hazard distances).

(8) Firing across, within, or through access corridors will not be permitted without coordination with the forward air controller.

(9) Close air support conducted by Marine Corps fixed- and rotary-wing aircraft will be conducted in accordance with appropriate TMs, MAWTS–1 publications, training and readiness manuals, and squadron SOPs.

b. Fire support by Air Force fixed wing aircraft will be conducted in accordance with AFI 13–212 (vols 1 thru 3) and ACC supplement.

Appendix A
References

Section I
Required Publications

AR 11–9
The Army Radiation Safety Program. (Cited in paras 18–1*d* and 18–1*g*.)

AR 40–5
Preventive Medicine. (Cited in paras 18–1*d* and 18–1*g*.)

AR 75–1
Malfunctions Involving Ammunition and Explosives (RCS CSGLD–1961(MI)). (Cited in paras 1–6*d*(3), 1–6*g*(2)(n), 3–4*a*, 3–4*b*, 3–4*b*(1)(b), 3–5*c*, 3–6*a*, 3–6*b*, 11–3*c*, and 17–1*b*(2).)

AR 95–2
Air Traffic Control, Airspace, Airfields, Flight Activities, and Navigational Aids. (Cited in paras 2–4*d* and 2–4*f*(8)(c).)

AR 95–27
Operational Procedures for Aircraft Carrying Hazardous Materials. (Cited in para 16–2*e*.)

AR 385–10
The Army Safety Program. (Cited in para 3–9*b*(1).)

AR 385–40
Accident Reporting and Records. (Cited in paras 1–6*b*(7), 1–6*d*(3), 1–6*f*(6), 1–6*g*(2)(n), 3–6*a*, 3–9*e*(8), and 18–1*g*.)

AR 385–63
Range Safety. (Cited in paras 1–1, 1–4*a*(3), 1–5*a*, 1–6*b*(2), 2–3*a*(1), and 14–7.)

AR 385–64
U.S. Army Explosives Safety Program. (Cited in paras 3–2*a* and 3–9*d*(1).)

AR 405–80
Management of Title and Granting Use of Real Property. (Cited in para 2–3*a*(4).)

DA PAM 40–501
Hearing Conservation Program. (Cited in para 17–1*f*(2).)

DA PAM 385–64
Ammunition and Explosives Safety Standards. (Cited in paras 3–2*a*, 3–9*e*(7), 17–1*b*(1), and 17–1*c*.)

FM 6–40
Tactics, Techniques, and Procedures for Field Artillery Manual Cannon Gunnery. (Cited in para 19–4*j*.) (Available from www.adtdl.army.mil.)

TB CML 100
Smoke Pot. (Cited in para 16–4*d*.) (Available at http://www.logsa.army.mil/etms/find_etm.cfm.)

TB MED 524
Occupational and Environmental Health: Control of Hazards to Health from Laser Radiation. (Cited in paras 1–6*f*(6) and 18–1*g*.) (Available at http://chppm-www.apgea.army.mil/armydocs.asp?pub_type+TBM.)

TB 9–1300–385
Munitions Restricted or Suspended. (Cited in paras 1–6*d*(1), 3–3*j*(1), 3–3*j*(3), 3–3*j*(4), 3–3*j*(5), 3–4*a*, 3–4*c*, 3–4*d*, 6–2*d*).)(Available at http://www.osc.army.mil/ib/ibq/surv/gen/surv.htm.)

TC 25–8
Training Ranges. (Cited in paras 2–2*e* and 7–1*d*(2).) (Available from www.adtdl.army.mil.)

MAWTS–1
Aerial Gunnery Manual. (Cited in para 13–3*a*.) (Available from Commanding Officer, Marine Aviation Weapons and Tactics Squadron One, Marine Corps Air Station, Yuma, AZ 85369.)

MCO 3570.1B
Range Safety. (Cited in paras 1–1, 1–4*a*(3), 1–5*a*, 1–6*b*(2), and 2–3*a*(1).)(Available at www.usmc.mil/directiv.nsf/web+orders.)

MCO P4030.19H
Preparing Hazardous Materials for Military Air Shipments. (Cited in para 16–2*e*.)(Available at www.usmc.mil/directiv.nsf/web+orders.)

MCO P5102.1A
Marine Corps Ground Mishap Reporting. (Cited in paras 1–6*b*(7), 1–6*g*(2)(n), and 3–6*a*.)(Available at www.usmc.mil/directiv.nsf/web+orders.)

MCO 5104.1
Navys Laser Hazards Control Program. (Cited in paras 1–6*a*(6), 1–6*f*(6), 18–1*d*, and 18–1*g*.)(Available at www.usmc.mil/directiv.nsf/web+orders.)

MCO P8020.10A
Marine Corps Ammunition Management and Explosives Safety Manual. (Cited in paras 3–3*f* and 17–1*b*(1).)(Available at www.usmc.mil/directiv.nsf/web+orders.)

MCO 8025.1_
Class V (W) Malfunction and Defect Reporting. (Cited in paras 1–6*d*(3), 1–6*g*(2)(n), 3–2*k*, 3–4*a*, 3–4*b*, 3–5*c*, and 11–3*c*(1).)(Available at www.usmc.mil/directiv.nsf/web+orders.)

MCWP 3–15.1
Machines Guns and Machine Gun Gunnery. (Cited in para 19–4*f*(3).)(Available at www.usmc.mil/directiv.nsf/web+orders.)

MIL–HDBK–828A
Laser Range Safety. (Cited in paras 1–6*a*(6), 1–6*f*(6), 11–6*a*(3), 13–5*e*(2), 18–1*a*, 18–2*a*, and 18–3.)(Available from http://dodssp.daps.mil.)

NAVSEA OP5, Volume 1
Ammunition and Explosives Ashore: Safety Regulations for Handling, Storage, Production, Renovation, and Shipping. (Cited in paras 1–7*g*(3), 3–2*a*, 3–7*a*, 17–1*b*, 17–1*b*(1), 17–1*b*(2).)(Available at https://intranet.nossa.navsea.navy.mil/explsaf.)

NAVSEA SWO20–AF–ABK–010
Motor Vehicle Driver and Shipping Inspector's Manual for Ammunition, Explosives, and Related Materiel. (Cited in para 17–1*b*(1).)(Available at https://intranet.nossa.navsea.navy.mil/explsaf.)

NAVSEA SWO60–AA–MMA–010
Demolition Materials. (Cited in paras 1–7*g*(3) and 17–1*b*.)(Available at https://intranet.nossa.navsea.navy.mil/explsaf.)

NAVSEA TWO24–AA–ORD–010
Ammunition Unserviceable, Suspended and Limited Use. (Cited in paras 1–6*d*(1), 3–2*j*, 3–3*j*(1), 3–3*j*(2), 3–3*j*(3), 3–3*j*(4), 3–4*a*, 3–4*c*, 3–4*d*, 6–2*d*.)(Available at https://intranet.nossa.navsea.navy.mil/explsaf.)

SPAWAR INST 5100.12B
Navy Laser Hazards Control Program. (Cited in para 1–6*a*(6).(Available at http://enterprise.spawar.navy.mil/spawarpublicsite/referencelib/index.htm.)

Section II
Related Publications

A related publication is a source of additional information. The user does not have to read it to understand this publication.

AR 15–6
Procedures for Investigating Officers and Boards of Officers

AR 40–10
Health Hazard Assessment Program in Support of the Army Materiel Acquisition Decision Process

AR 75–15
Responsibilities and Procedures for Explosive Ordnance Disposal.

AR 95–1
Flight Regulations

AR 200–1
Environmental Protection and Enhancement

AR 200–2
Environmental Effects of Army Actions

AR 210–21
Army Ranges and Training Land Program

AR 360–1
The Army Public Affairs Program

AR 385–16
System Safety Engineering and Management

AR 385–95
Army Aviation Accident Prevention

AR 405–90
Disposal of Real Estate

FM 1–111
Aviation Brigades

FM 1–140
Helicopter Gunnery

FM 3–06.11
Combined Arms Operations in Urban Terrain

FM 3–20.12
Tank Gunnery (Abrams)

FM 3–22.68
Crew Served Marchine Gun, 5.56mm and 7.62mm

FM 3–23.30
Grenades and Pyrotechnic Signals

FM 5–103
Survivability

FM 5–250
Explosives and Demolitions

FM 6–50
Tactics, Techniques, and Procedures for the Field Artillery Cannon Battery

FM 6–60
Tactics, Techniques, and Procedures for Multiple Launched Rocket System (MLRS) Operations

FM 9–15
Explosive Ordnance Disposal Service and Unit Operations

FM 10–67–1
Concepts and Equipment of Petroleum Operations

FM 20–32
Mine/Countermine Operations

FM 4–25.11
First Aid

FM 21–16
Unexploded Ordnance (UXO) Procedures

FM 21–75
Combat Skills of the Soldier

FM 23–1
Bradley Gunnery

FM 23–23
Antipersonnel Mine, M18A1 and M18 (Claymore)

FM 23–65
Browning Machinegun, Caliber .50, HB, M2

FM 23–67
Machinegun 7.62-mm, M60.

FM 90–10–1
An Infantryman's Guide to Combat in Built-Up Areas.

FM 100–14
Risk Management

Marine Corps Bulletin 8011
Class V (W) Materiel Allowances for Training and Security

TB 9–1310–251–10
Operator's Manual Range Clearing Procedures for Cartridge 40MM: TP, M918

TM 9–1300–200
Ammunition, General. (Available from www.logsa.army.mil/etms/find_etm.cfm.)

TM 9–1330–200–12
Operator's and Organizational Unit Maintenance Manual for Grenades (Available from www.logsa.army.mil/etms/find_etm.cfm.)

TM 9–1345–203–12
Operator's and Unit Maintenance Manual for Land Mines (Available from www.logsa.army.mil/etms/find_etm.cfm.)

TM 9–1370–207–10
Operator's Manual–Pyrotechnic Simulators (Available from www.logsa.army.mil/etms/find_etm.cfm.)

TM 9–1375–213–12
Operators and Unit Maintenance Manual (Including Repair Parts and Special Tools List) Demolition Materials (Available from www.logsa.army.mil/etms/find_etm.cfm.)

TM 9–6920–361–13&P
Operator, Organizational and Direct Support Maintenance Manual (Including Repair Parts and Special Tools List) Field Artillery Trainer Kits (With Field Artillery Trainer M31) (Available from www.logsa.army.mil/etms/find_etm.cfm.)

TM 43–0001–27
Army Ammunition Data Sheets Small Caliber Ammunition (FSC 1305) (Available from www.logsa.army.mil/etms/find_etm.cfm.)

TM 43–0001–28
Army Ammunition Data Sheets for Artillery Ammunition: Guns, Howitzers, Mortars, Recoilless Rifles, Grenade Launchers and Artillery Fuzes (Federal Supply Class 1310, 1315, 1320, 1390) (Available from www.logsa.army.mil/etms/find_etm.cfm.)

TM 43–0001–29
Army Ammunition Data Sheets for Grenades (Available from www.logsa.army.mil/etms/find_etm.cfm.)

TM 43–0001–30
Army Ammunition Data Sheets for Rocket Systems, Rocket Fuzes, Rocket Motors (FSC 1340) (Available from www.logsa.army.mil/etms/find_etm.cfm.)

TM 43–0001–36
Army Ammunition Data Sheets for Land Mines (FSC 1345) (Available from www.logsa.army.mil/etms/find_etm.cfm.)

TM 43–0001–37
Army Ammunition Data Sheets for Military Pyrotechnics (FSC 1370) (Available from www.logsa.army.mil/etms/find_etm.cfm.)

TM 43–0001–38
Army Ammunition Data Sheets for Demolition Materials (Available from www.logsa.army.mil/etms/find_etm.cfm.)

ANSI Z136.1
American National Standard for Safe Use of Lasers. (Available from http://webstore.ansi.org/ansidocstore.)

Code of Federal Regulations, Title 21, Part 1040
Standards for Light-Emitting Products. (Available from www.access.gpo.gov/nara/cfr/index.html.)

Code of Federal Regulations, Title 29, Part 1910
Occupational Safety and Health Standards. (Available from www.access.gpo.gov/nara/cfr/index.html.)

Code of Federal Regulations, Title 33, Part 334
Danger Zone and Restricted Area Regulations. (Available from www.access.gpo.gov/nara/cfr/index.html.)

Code of Federal Regulations, Title 33, Part 334.10
Navigation and Navigable Waters. (Available from www.access.gpo.gov/nara/cfr/index.html.)

Code of Federal Regulation, Title 40, Part 260
Environmental Protection Agency, Military Munitions Rule: Hazardous Waste Identification and Management; Explosives Emergencies; Manifest Exemption for Transport of Hazardous Waste on Right-of-Ways on Contiguous Properties; Final Rule. (Available from www.access.gpo.gov/nara/cfr/index.html.)

DODD 5030.19
Military Airspace and Air Traffic Service Functions. (Available at www.dtic.mil/whs/directives.)

Department of Health, Education, and Welfare Publication Number 76–130 (Publication PB 266–426)
Lead Exposure and Design Considerations for Indoor Firing Ranges, Technical Information, December 1975, National Institute for Occupational Safety and Health (NIOSH). (Available at National Technical Information Service, (800) 553–6847.)

FAA Handbook 7400.2
Procedures for Handling Airspace Matters. (Available from www.faa.gov/Atpubs.)

Marine Corps TM 1185–14/1
Operation, Organizational, and Intermediate Maintenance Instructions with Illustrated Parts Breakdown (Smoky Sam Simulator/Antiaircraft Artillery Visual Cueing System). (Available at www.usmc.mil/directiv.nsf/web+orders.)

Marine Corps TM 1185–14/2
Loading and Firing Checklist for LMU–23A/E Single Bay Launcher. (Available at www.usmc.mil/directiv.nsf/web+orders.)

Marine Corps TM 1290–12/1
Operators' Manual-Simulator Laser Target (AN/GVT–1). (Available at www.usmc.mil/directiv.nsf/web+orders.)

MCO 3500.27A
Operational Risk Management (ORM). (Available at www.usmc.mil/directiv.nsf/web+orders.)

MCO 3574.2J
Entry Level and Sustainment Level Marksmanship Training with the M16A2 Service Rifle and M9 Service Pistol. (Available at www.usmc.mil/directiv.nsf/web+orders.)

MCO 8011.4_
USMC Training Ammunition Class V (W) Materiel (Peacetime). (Available at www.usmc.mil/directiv.nsf/web+orders.)

MCO 8027.1_
Interservice Responsibilities for Explosive Ordnance Disposal. (Available at www.usmc.mil/directiv.nsf/web+orders.)

MCRP 3–1.6.24
Tactics, Techniques, and Procedures for Multiple Launched Rocket System (MLRS) Operations. (Available from www.adtdl.army.mil/cgi-bin/atdl.dll?agemcu=m.)

MIL–STD 709C
Ammunition Color Coding. (Available at http://dodssp.daps.mil.)

NAVMEDCOMINST 6470.2A
Laser Radiation Medical Surveillance Program. (Available from www.nswc.navy.mil/safety.)

OPNAVINST 3770.2
Airspace Procedures and Planning Manual (Available from http://neds.nebt.daps.mil/directives/3770_2j.pdf.)

USAF AFI 13–212 Vol I
Range Planning and Operations. (Available at http://afpubs.hq.af.mil/pubs/majcom.asp?org=AF.)

USAF AFI 13–212 Vol II
Range Construction and Maintenance. (Available at http://afpubs.hq.af.mil/pubs/majcom.asp?org=AF.)

USAF AFI 13–212 Vol III
SAFE–RANGE Program Methodology Weapons Ranges. (Available at http://afpubs.hq.af.mil/pubs/majcom.asp?org=AF.)

Industrial Ventilation, A Manual for Recommended Practice
19th edition, 1985, American Conference of Governmental Industrial Hygienists (ACGIH), Lansing, Michigan.

Section III
Prescribed Forms

The following forms are available on the Army Electronic Library (AEL) CD–ROM (EM 0001) and the USAPA web site (www.usapa.army.mil).

DA Form 5687
Initial Inspection Checklist for Indoor Ranges. (Prescribed in para 2–6*e*(1)).)

DA Form 5688
Detailed Inspection Checklist for Indoor Ranges. (Prescribed in para 2–6*e*(2)).)

Section IV
Referenced Forms

DA Form 4379–1R
Missile and Rocket Malfunction Report

Appendix B
Bat Wing Surface Danger Zones

B–1. Firing conditions

SDZs in this appendix provide for greater containment of all ricochets. They should be considered when designing ranges that involve fire and movement, or where ricochet hazards outside the range complex boundary may endanger nonparticipating personnel, or the general public. Where bat wing SDZs have already been applied or can be employed without significant impact on range operations, the bat wing SDZs should be implemented.

B–2. Surface danger zone

a. Figure B–1 depicts the SDZ for small arms, machine guns, shotguns, and other direct fire weapons without explosive projectiles, firing from a single firing position along the GTL to a single target.

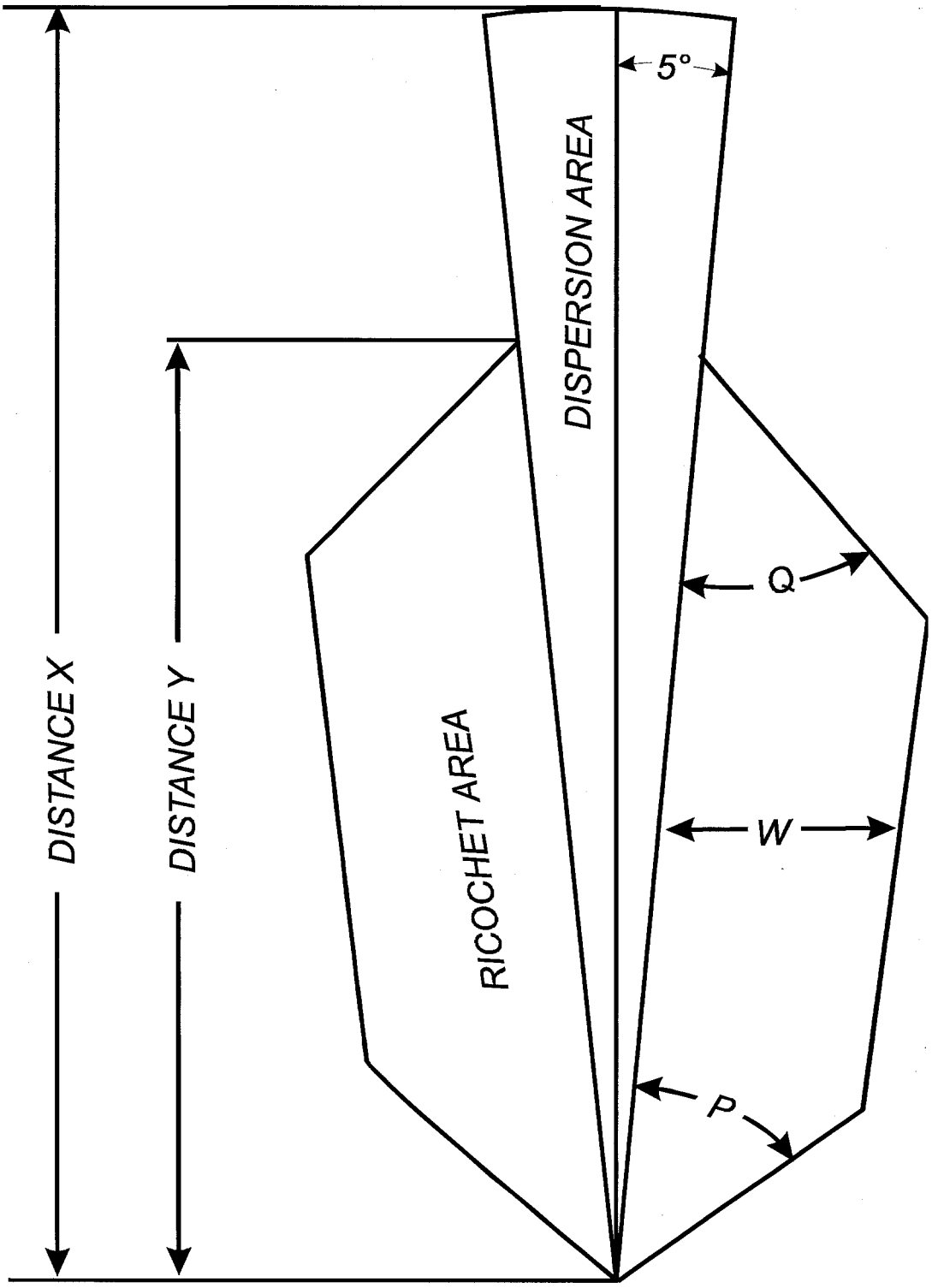

Figure B–1. SDZ for direct-fire weapons without explosive projectiles

b. Figure B–2 depicts the SDZ for direct fire weapons with explosive projectiles, firing from a single firing position along the GTL to a single target.

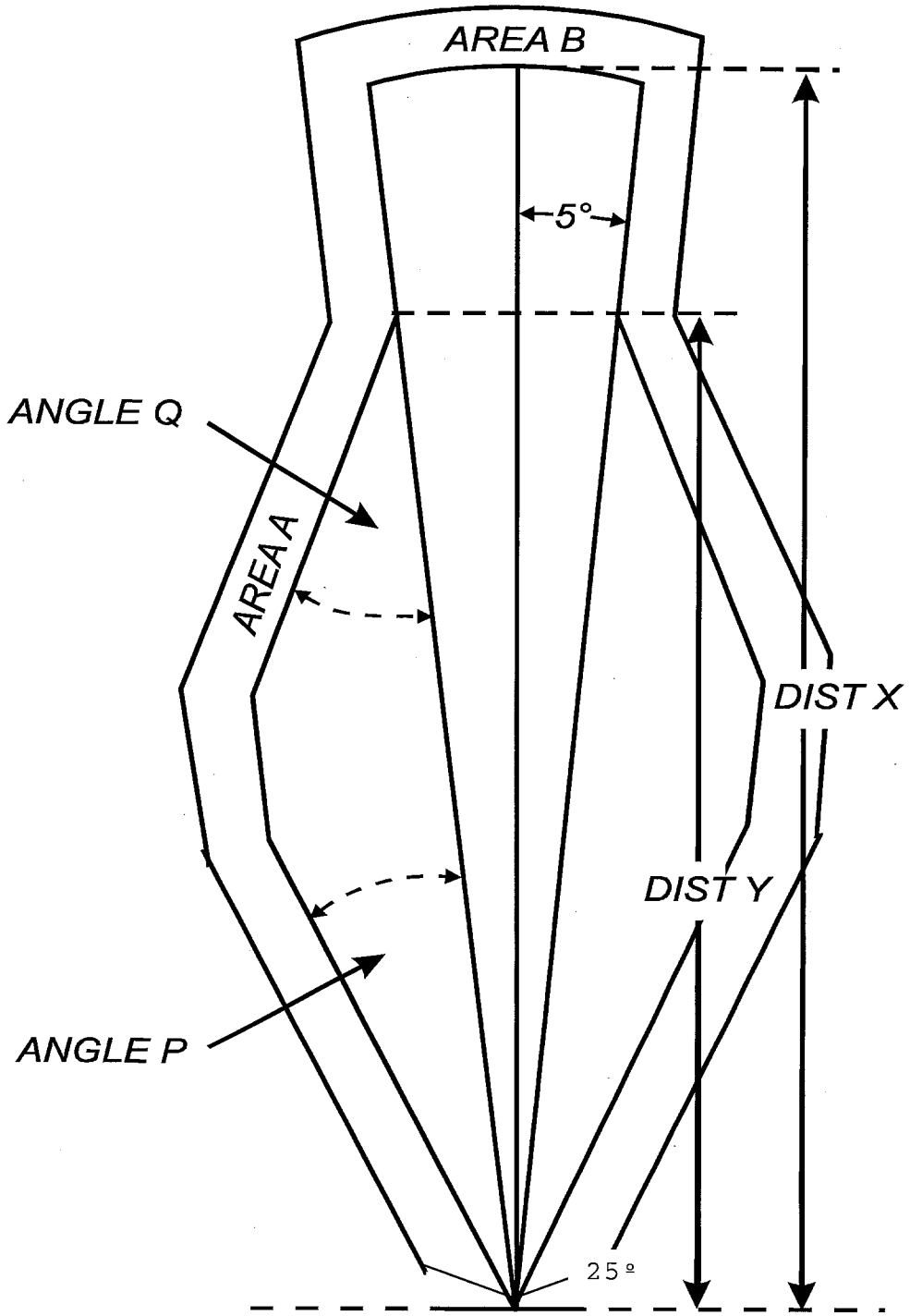

Figure B–2. SDZ dimensions for direct-fire weapons with explosive projectiles

c. When the nature or extent of training requires multiple firing positions, bisect the GTL longitudinally and expand the GTL to accommodate multiple targets. This establishes left and right limits of fire.

d. When the nature or extent of training requires moving targets, bisect the GTL longitudinally and expand the GTL to accommodate moving targets. This establishes left and right limits of fire.

e. Table B–1 provides SDZ dimensions with corresponding deflection values (area *W*, angles *P* and *Q*) for engaging various target media, earth, water, steel, or concrete for small arms, machine guns, shotguns, and other direct fire weapons without explosive projectiles.

Table B–1
SDZs for direct-fire weapons without explosive projectiles

Caliber	Impact media	Distance *X*	Distance *Y*	Area *W*	Vertical Hazard	Angle *P*	Angle *Q*
		(in meters)				(in degrees)	
12 gage Slug	Earth/water	1,073	710	125	136	21.96	33.34
	Steel/concrete	1,073	830	287	197	56.91	40.17
.22 caliber Long rifle, M24	Earth/water	1,400	1,033	155	96	24.00	15.90
	Steel/concrete	1,400	1,125	386	245	63.40	30.30
.38 caliber M41 Ball	Earth/water	1,806	1,110	153	89	22.57	16.07
	Steel/concrete	1,806	1,258	389	245	60.95	35.36
9 mm M882, ball	Earth/water	1,800	1,077	158	93	23.10	15.80
	Steel/concrete	1,800	1,211	399	253	61.10	30.40
.45 caliber M1911 Pistol/SMG	Earth/water	1,690	1,016	117	100	21.11	16.69
	Steel/concrete	1,690	1,111	290	186	54.74	30.77
5.56 mm M193 Ball	Earth/water	3,100	2,004	458	319	35.20	23.10
	Steel/concrete	3,100	1,666	323	219	19.00	26.90
5.56 mm M196 Tracer	Earth/water	3,100	2,066	362	355	35.10	26.80
	Steel/concrete	3,100	2,023	243	243	19.20	22.80
5.56 mm M855 Ball	Earth/water	3,437	2,029	462	325	34.20	22.40
	Steel/concrete	3,437	1,810	334	229	18.80	25.20
5.56 mm M856 Tracer	Earth/water	3,089	1,607	355	261	32.80	23.20
	Steel/concrete	3,089	1,592	277	261	18.60	21.00
5.56 mm M862 Plastic	Earth/water	250	165	24	16	15.40	20.00
	Steel/concrete	250	136	5	4	3.30	7.30
7.62 mm M118 Special	Earth/water	5,288	4,800	1,545	752	43.81	38.73
	Steel/concrete	5,288	5,137	990	490	20.17	41.29
7.62 mm M80 Ball	Earth/water	4,100	4,073	1,461	706	43.54	38.90
	Steel/concrete	4,100	4,053	861	447	20.04	75.54
.50 caliber M858 Ball, plastic	Earth/water	700	398	20	41	4.28	9.16
	Steel/concrete	700	415	53	41	11.65	21.14
.50 caliber M860 Tracer, plastic	Earth/water	700	398	20	41	4.28	9.16
	Steel/concrete	700	415	53	41	11.65	21.14
.50 caliber M2 AP	Earth/water	6,100	5,142	1,659	904	40.80	69.60
	Steel/concrete	6,100	4,300	718	462	16.30	33.10
.50 caliber M2 Ball	Earth/water	6,500	5,211	1652	901	38.19	63.35
	Steel/concrete	6,500	4,147	714	478	16.03	44.13
20 mm M220 TP–T	Earth	3,940	3,340	581	317	25.83	22.83
	Water	3,940	3,040	558	311	26.08	30.96
	Steel	3,940	3,290	804	513	36.66	47.76
	Concrete	3,940	3,260	765	447	34.33	34.09
20 mm M55A2 TP	Earth	4,500	3,780	733	357	25.74	33.20
	Water	4,500	3,500	737	350	26.16	36.66
	Steel	4,500	4,053	1,025	585	38.14	36.82
	Concrete	4,500	3,750	969	509	34.12	37.78

Table B–1
SDZs for direct-fire weapons without explosive projectiles—Continued

Caliber	Impact media	Distance *X*	Distance *Y*	Area *W*	Vertical Hazard	Angle *P*	Angle *Q*
		(in meters)				(in degrees)	
30 mm M788 TP–T	Earth	4,020	3,116	636	311	24.93	40.37
	Water	4,020	3,252	730	298	25.19	28.65
	Steel	4,020	3,631	1,023	524	36.78	33.18
	Concrete	4,020	3,600	874	451	30.66	35.59

f. Table B–2 provides SDZ dimensions with corresponding deflection values (area *W*, angles *P* and *Q*) for engaging various target media, earth, water, steel, or concrete direct fire weapons with explosive projectiles.

Table B–2
SDZs for direct-fire weapons with explosive projectiles

Caliber	Impact media	Distance *X*	Distance *Y*	Area *W*	Vertical Hazard	Area *A*	Area *B*	Angle *P*	Angle *Q*
		(in meters)						(in degrees)	
20 mm, M246 HEI–T–SD	Earth	4,230	3,537	685	360	156	156	26.73	39.83
	Water	4,230	3,316	716	354	156	156	25.81	35.87
	Steel	4,230	3,937	991	590	156	156	38.63	38.58
	Concrete	4,230	3,758	952	531	156	156	34.99	50.31
20 mm, M56a3 HEI	Earth	4,250	3,940	771	403	156	156	26.89	34.54
	Water	4,250	3,980	864	396	156	156	27.21	40.82
	Steel	4,250	4,160	1,219	664	156	156	38.36	58.05
	Concrete	4,250	4,240	1,189	577	156	156	34.65	43.79
30 mm, M789 HEDP	Earth	4,122	3,305	654	318	275	275	25.37	39.65
	Water	4,122	3,263	746	302	275	275	24.71	34.53
	Steel	4,122	3,947	1,058	534	275	275	36.26	39.59
	Concrete	4,122	3,684	886	460	275	275	31.56	42.14

g. Table B–3 provides SDZ dimensions with corresponding deflection values (area *W*, angles *P* and *Q*) for RAAWS/MAAWS.

Table B–3
SDZ dimensions for Range Antiarmor Weapons System (RAAWS)/Multirole Antiarmor

Type munition	Impact media	Distance *X*	Distance *Y*	Area *W*	Minimum range to impact[1]	Area *A*	Area *B*	Angle *P*	Angle *Q*
		(in meters)						(in degrees)	
FFV 441 HE	ALL	2,600	2,230	470	250	400	400	12.5	85
FFV 551 HEAT	ALL	3,200	2,710	1,575	50	150	150	38	75
FFV 552 TP	ALL	3,200	2,710	1,575	50	100	100	38	75
FFV 469 Smoke	ALL	2,600	2,230	490	150	150	150	13	84
FFV 545B[2] Illum	N/A	2,900	N/A	N/A	N/A	100	100	N/A	N/A
FFV 553B 7.62 mm Tracer	ALL	3,200	2,900	700	N/A	N/A	N/A	65	84

Notes:
[1] May be reduced by 60 percent when firing nonexplosive projectiles from unprotected positions or explosive projectiles from protected positions.
[2] Not a direct fire round. Use figure 8–1 to construct SDZ.

B–3. Caliber .50, saboted light armor penetrator (SLAP), and MK211 API

a. Figure B–3 depicts SDZ for .50 caliber SLAP M903, SLAP–T M962, and MK211 ammunition. Figure B–4 depicts sabot hazard discard area SDZ for .50 caliber SLAP M903 and SLAP–T M962 ammunition.

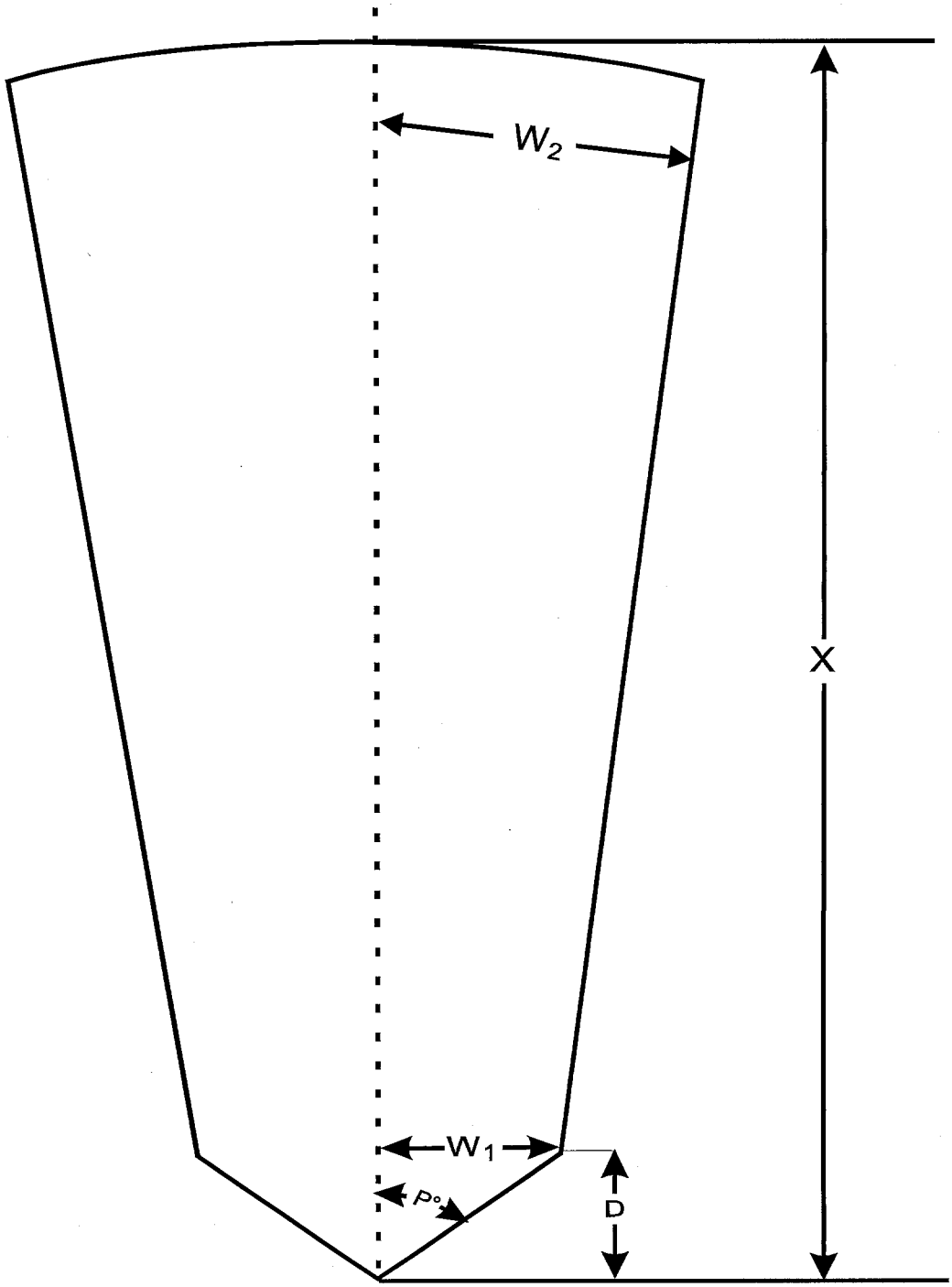

Figure B–3. SDZ dimensions for .50 cal SLAP M903, SLAP–T M962, and MK211API ammunition

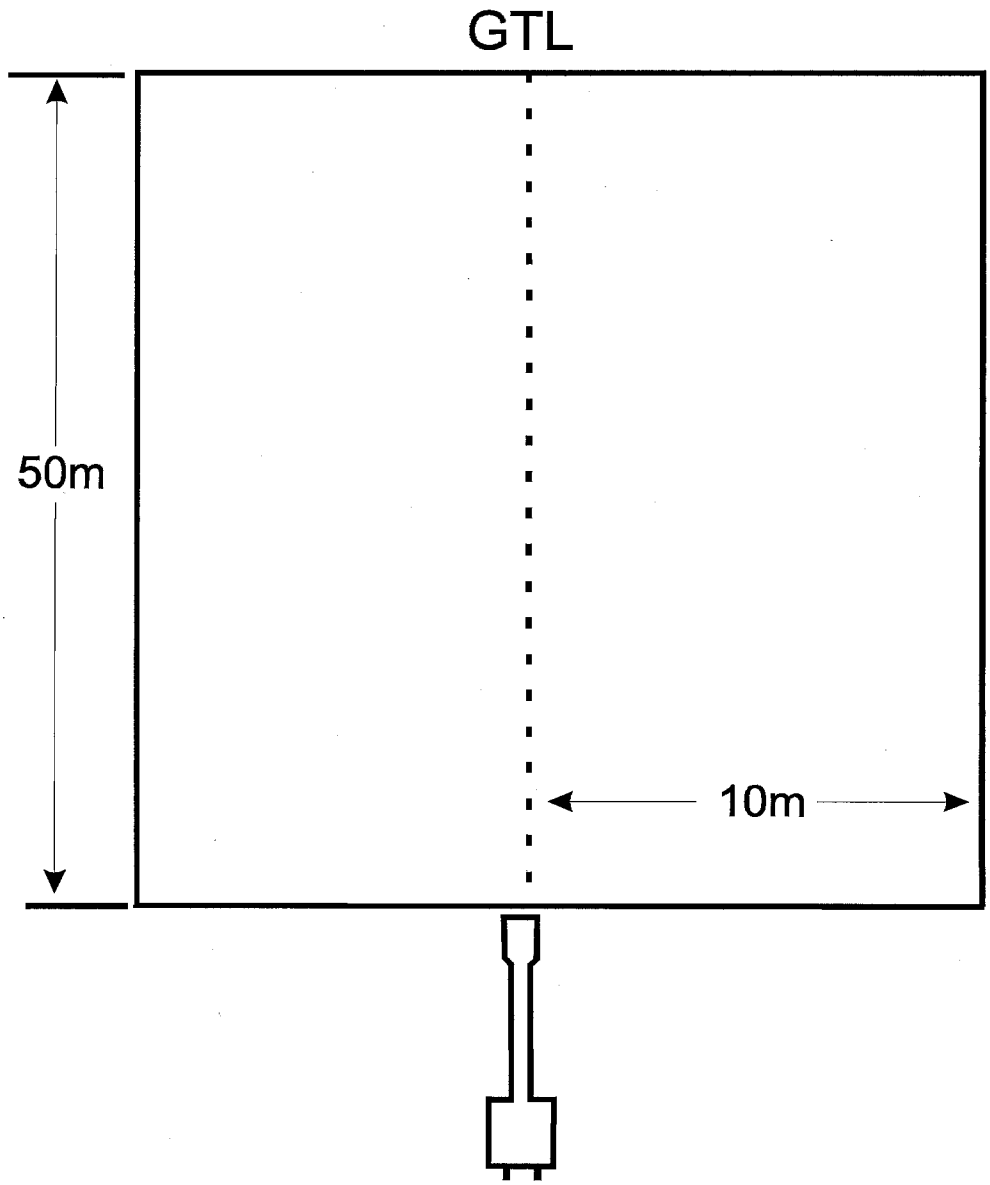

Figure B–4. SDZ dimensions for .50 cal SLAP M903 and SLAP–T M962 ammunition Sabot discard hazard area

b. The SDZ criteria for the M903 are contained in table B–4. SDZ criteria for M962 are in table B–5. SDZ criteria for MK211 are in table B–6.

Table B–4
SDZ criteria cal .50, saboted light armor penetrator (SLAP) M903 (sand and steel media)

Altitude	Angle *P*	Distance *X*	Distance *D*	Area *W1*	Area *W2*
(in feet MSL)	(in degrees)	(in meters)			
0	47.339	8,700	728	790	1,130
1,000	47.335	8,960	746	810	1,155
2,000	47.371	9,220	764	830	1,180
3,000	47.386	9,480	782	850	1,205
4,000	47.400	9,745	800	870	1,230

Table B–4
SDZ criteria cal .50, saboted light armor penetrator (SLAP) M903 (sand and steel media)—Continued

Altitude	Angle *P*	Distance *X*	Distance *D*	Area *W1*	Area *W2*
(in feet MSL)	(in degrees)	(in meters)			
5,000	47.414	10,005	818	890	1,255
6,000	47.427	10,265	836	910	1,280
7,000	47.439	10,525	854	930	1,305

Legend for Table B-4:
MSL = altitude above mean sea level.

Table B–5
SDZ criteria cal .50, saboted light armor penetrator-tracer (SLAP–T) M962 (sand and steel media)

Altitude	Angle *P*	Distance *X*	Distance *D*	Area *W1*	Area *W2*
(in feet MSL)	(in degrees)	(in meters)			
0	47.996	9,640	670	744	1,240
1,000	48.004	9,950	686	762	1,270
2,000	48.013	10,265	702	780	1,300
3,000	48.021	10,575	718	798	1,330
4,000	48.028	11,885	734	816	1,360
5,000	48.036	11,200	750	834	1,390
6,000	48.043	11,510	766	852	1,420
7,000	48.049	11,820	782	870	1,450

Legend for Table B-5:
MSL = altitude above mean sea level.

Table B–6
SDZ Criteria cal .50, MK211 (sand and steel media)

Altitude	Angle *P*	Distance *X*	Distance *D*	Area *W1*	Area *W2*
(in feet MSL)	(in degrees)	(in meters)			
0	49.475	7,955	530	620	1,075
1,000	50.257	8,104	528	635	1,100
2,000	51.019	8,325	526	650	1,125
3,000	51.763	8,515	524	665	1,150
4,000	52.488	8,700	522	680	1,175
5,000	53.196	8,885	520	695	1,120
6,000	53.886	9,075	518	710	1,225
7,000	54.560	9,260	516	725	1,250

Legend for Table B-6:
MSL = altitude above mean sea level.

Appendix C
Surface Danger Zone Design

C–1. Description

a. SDZs for direct- and indirect-fire weapons, as determined by test methods and computer simulation systems, have similar parameters or components. Their size and shape vary, because of performance characteristics of the weapon system and ammunition models. Figures C–1 and C–2 illustrate direct- and indirect-fire SDZs, respectively. Descriptions of the SDZ parameters or components are in the glossary, section II, terms.

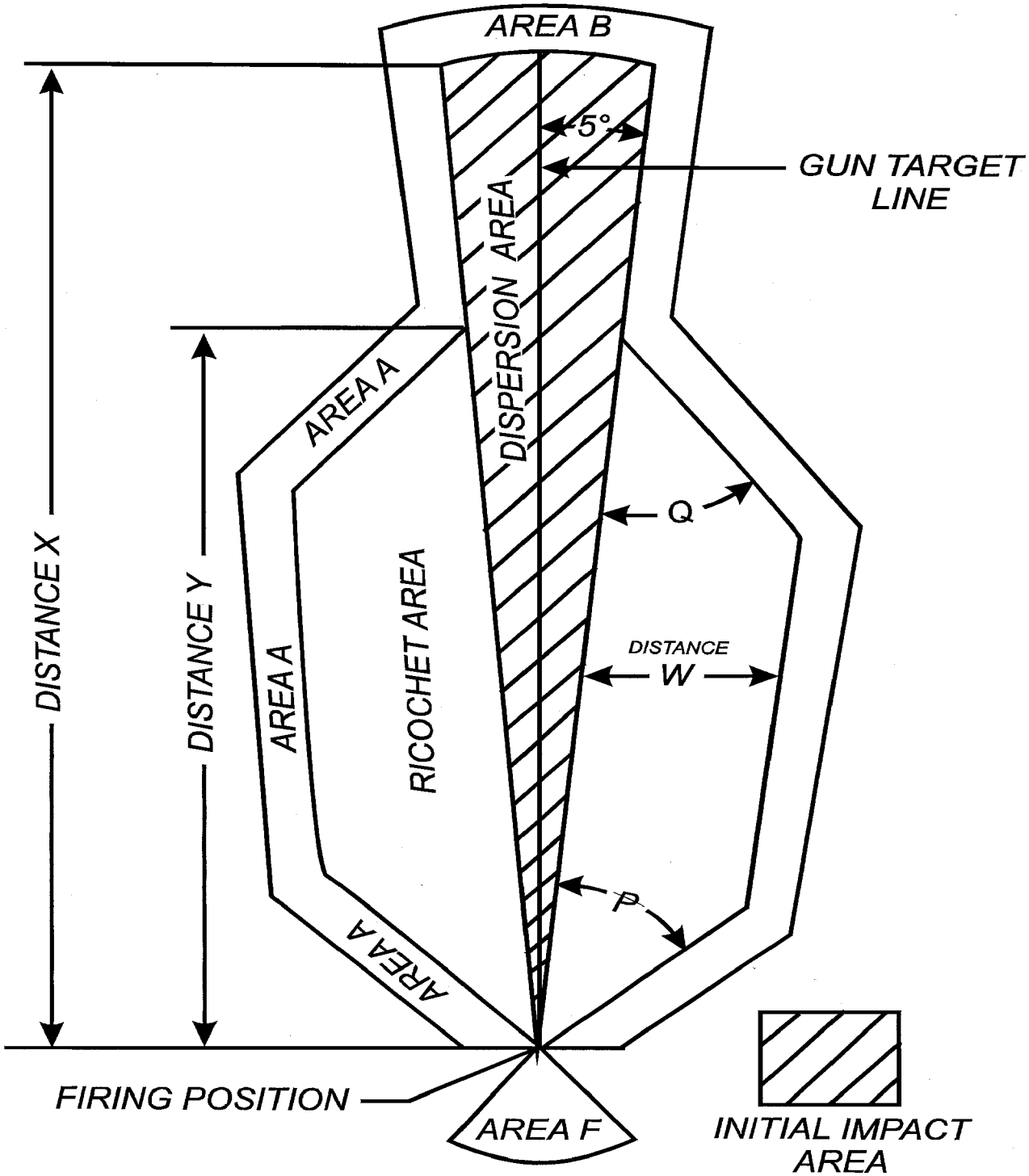

Figure C–1. SDZ dimensions for direct-fire weapons with explosive projectiles

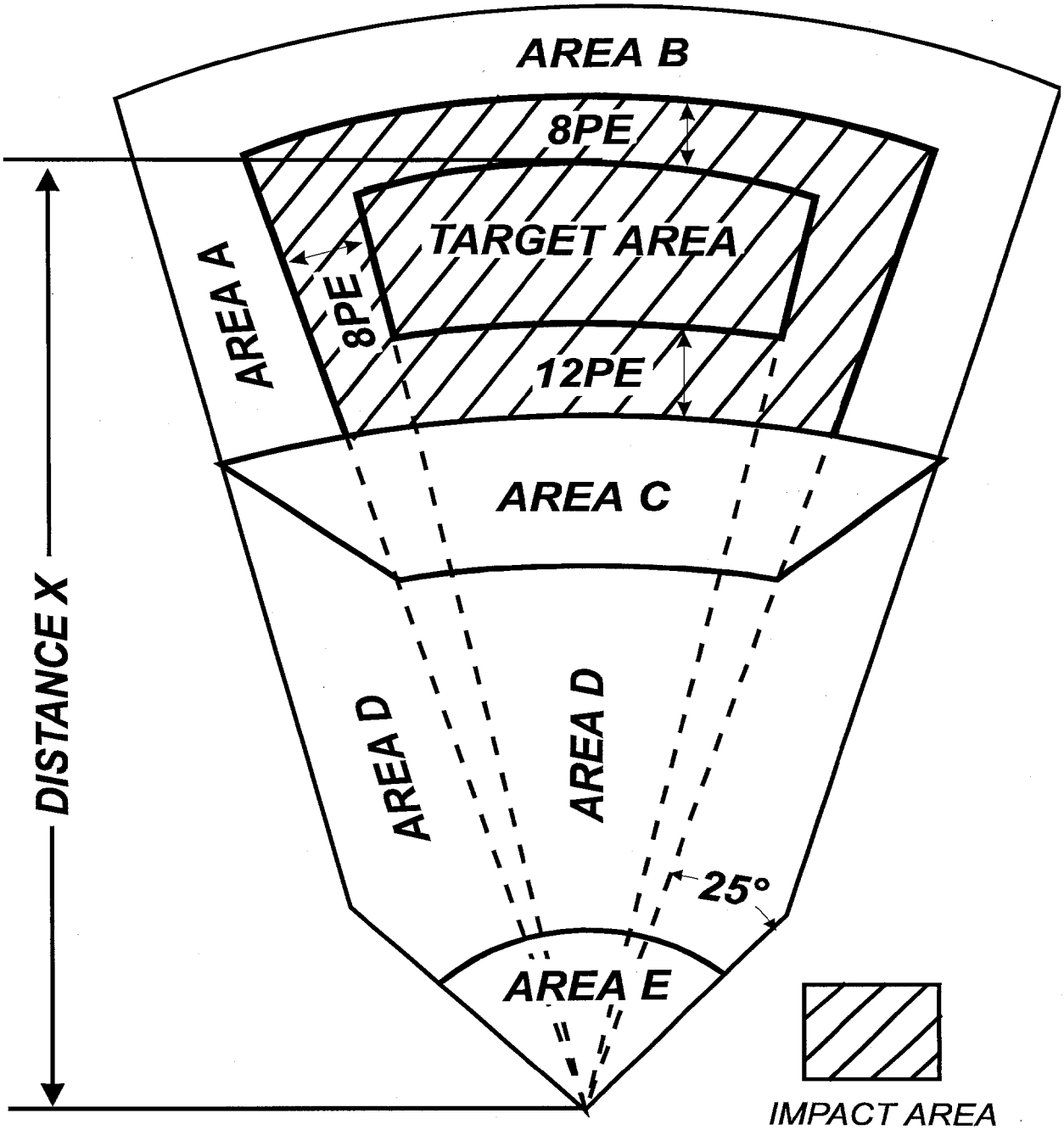

Figure C–2. Indirect fire SDZ

b. Computer simulation models, based on and validated by actual weapon system firing, generate ballistic "footprints," which are the basis of SDZs. These SDZs represent actual weapon system performance. Figure C–3 illustrates a typical ballistic footprint and associated SDZ. This illustration does not include 5 degrees (89 mils) of dispersion for human sighting error and inherent weapon system characteristics (for example, tube or cannon wear, propellant temperature, and so forth).

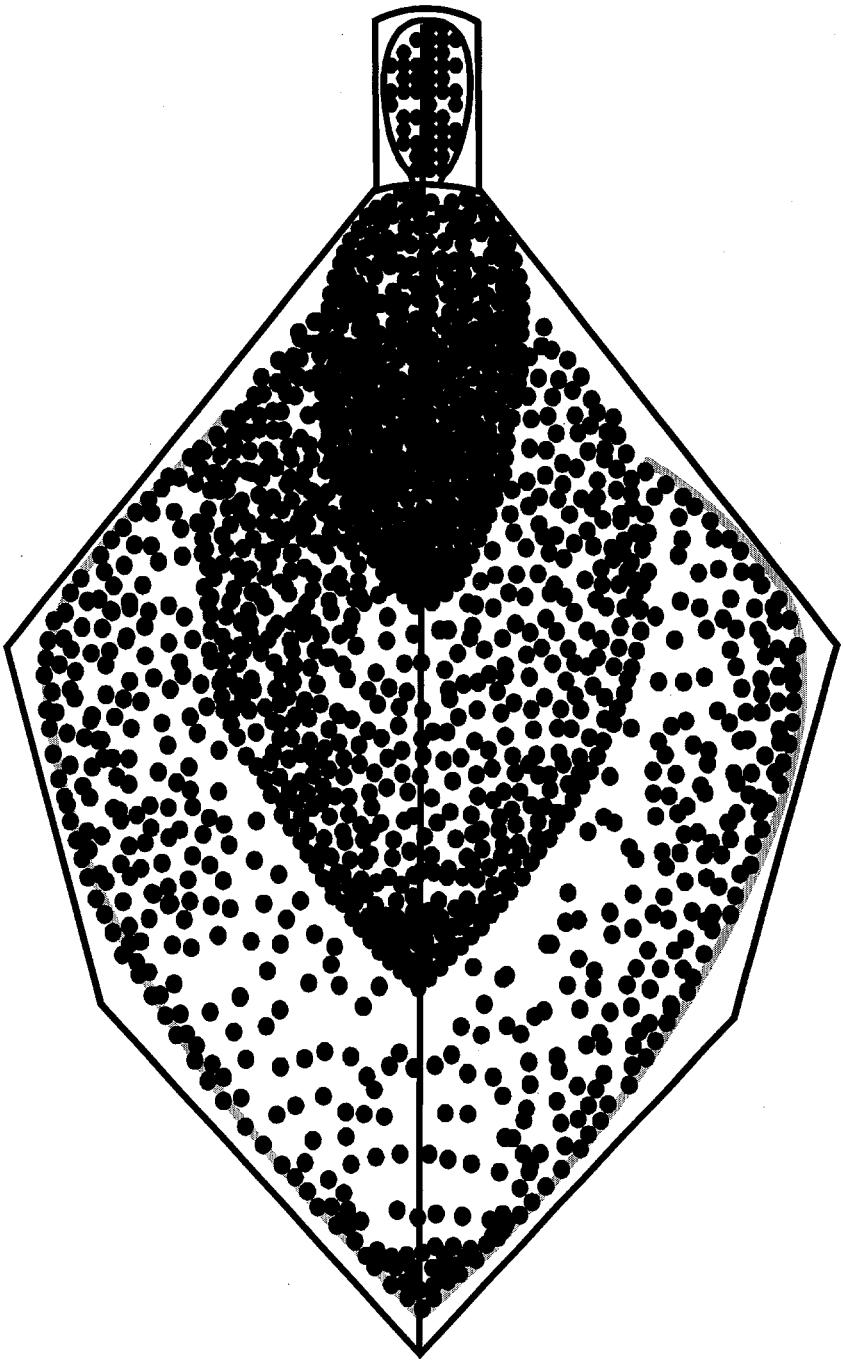

Figure C–3. Ballistic footprint and associated SDZ

c. Lateral SDZ requirements are generally greater at shorter ranges because of higher projectile velocities. As the target range increases, projectile velocity decreases; this generally results in a narrower SDZ further down range. Projectiles impact more perpendicular to the earth as the quadrant elevation increases. Lateral ricochets diminish significantly at quadrant elevations above 15 degrees.

d. Unique weapon systems contained in this pamphlet require special SDZs (for example, MLRS, TOW, Patriot, and Improved Hawk). The parameters or components of these special SDZs are similar to those listed above, however, the manner in which the SDZs are constructed is different. This pamphlet describes the construction of the special SDZs for these unique weapon systems.

C–2. Basic SDZs

a. The basis for construction of any SDZ is fundamental. All SDZs, regardless of complexity, are drawn from a point or points of reference. With a fundamental understanding of the need for, and basis of, SDZs, and this pamphlet, users will be able to construct any SDZ. It is imperative to use this pamphlet as a reference in constructing all SDZs.

b. To construct an accurate and precise SDZ, users will need the following equipment as a minimum: compass, protractor, plotting scale, and fine point pencil. Dimensions of SDZ parameters (for example, angles *P* and *Q*, areas *A* and *B*) are given in the respective table for each weapon system. Draw lines lightly in pencil, at first, so unnecessary construction lines can be erased more easily; then go back and darken the lines that define the SDZ.

c. The procedure outlined below is one way to construct an SDZ. It is suitable for SDZs that are based on current test methods and computer simulation models.

(1) Determine the firing position and the target position. Draw a straight line from the firing position through the target position to the required distance *X* (plus the additional distance requirement for area *B*, if applicable). This establishes the GTL (missile target line, rocket target line, and so forth). Place a tic mark on the GTL at distance *X* (include area *B*, if applicable) for future reference. (See figure C–4.)

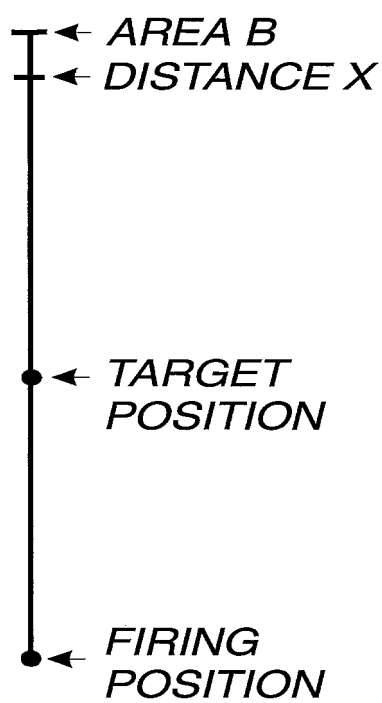

Figure C–4. Gun target line

(2) At the firing position, measure out to the left and right of the GTL, with a protractor, the required degrees to establish the dispersion area; place tic marks. Draw a straight line from the firing position through each tic mark out to distance *X*. (See figure C–5.)

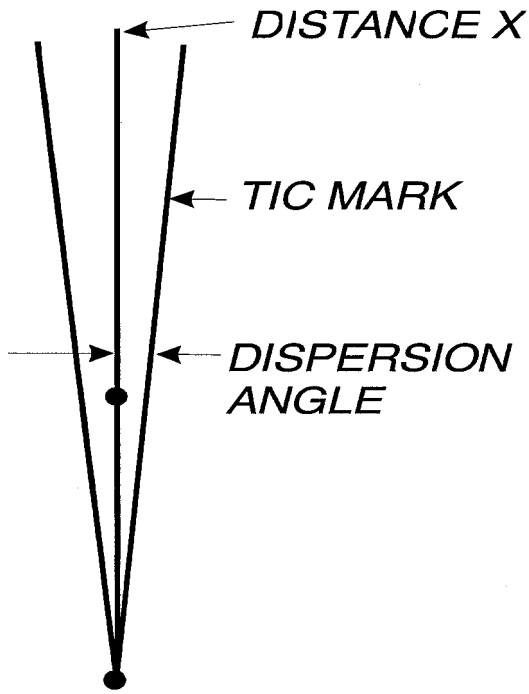

Figure C–5. Dispersion area angles

(3) From the firing position, scribe an arc between the left and right limits of the dispersion area (i.e., the lines constructed in (2) above), with a compass, using distance *X* as the radius. This completes the dispersion area. (See figure C–6.)

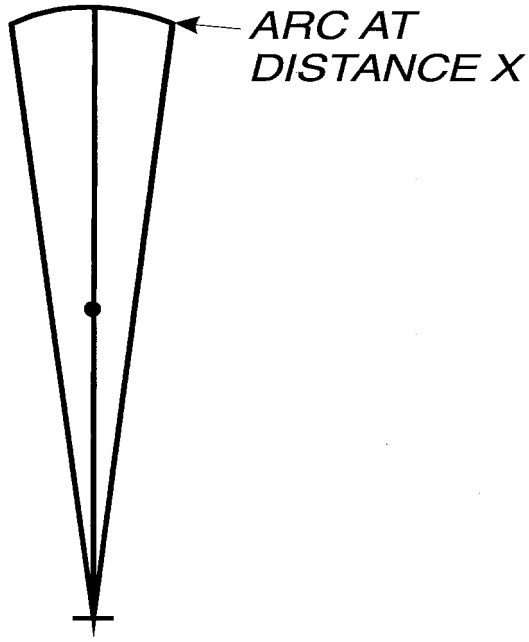

Figure C–6. Dispersion area

(4) Place a tic mark at distance *Y* along the left and right limit of the dispersion area for future reference. (See figure C–7.)

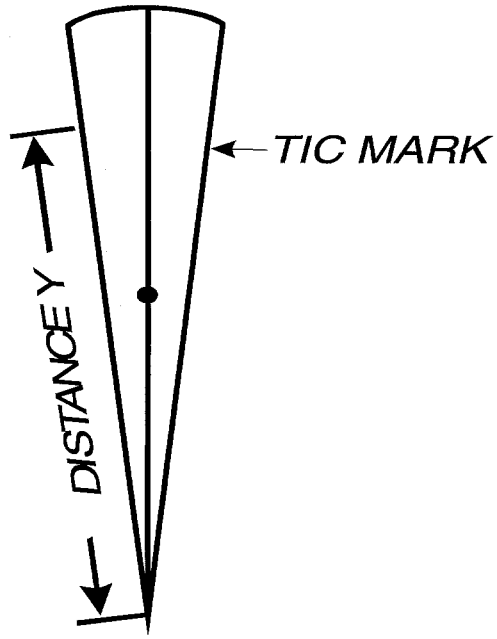

Figure C–7. Tic marks for distance *Y*

(5) At the firing position, using a protractor, measure from the left and right limits of the dispersion area determined above, the required degrees for ricochet area, angle *P*; place tic marks. Draw a straight line from the firing position through the tic marks. Next, at distance *Y*, measure with a protractor, from the left and right limits of the dispersion area, back toward the firing position with a protractor the required degrees for ricochet area, angle *Q*; place tic marks. Draw a straight line from the tic marks at distance *Y* (step 4, above) through the tic marks just drawn. (See figure C–8.)

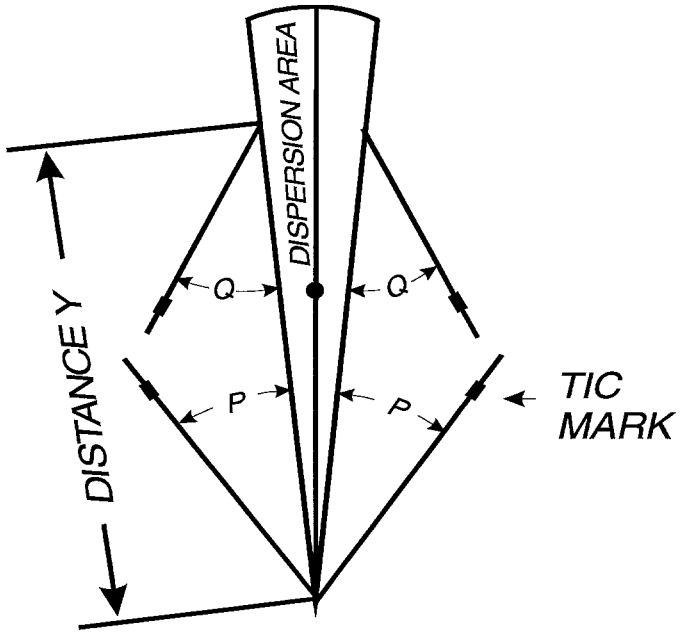

Figure C–8. Addition of angles *P* and *Q*

(6) At two locations, measure perpendicular from the left and right limits of the dispersion area the required distance for area *W* and place tic marks. Draw a straight line through the tic marks to intersect the lines previously drawn for angles *P* and *Q*. This completes the ricochet area. (See figure C–9.)

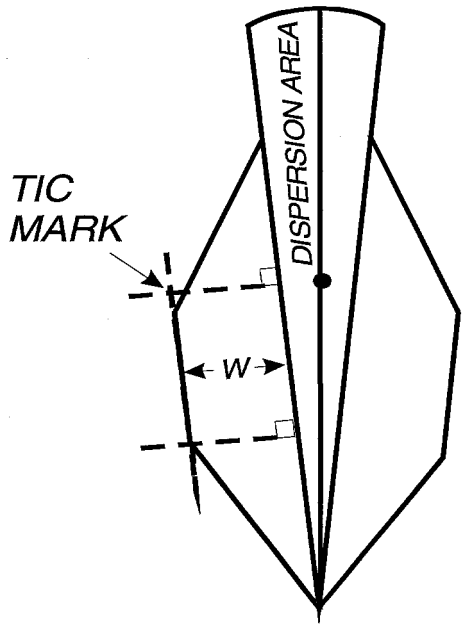

Figure C–9. Completion of area *W*

(7) If areas *A* and *B* are required, draw these areas parallel to the dispersion area and ricochet area. Measure perpendicular at two locations along the perimeter of the dispersion area and ricochet area, place a tic mark. Next, connect the tic marks with straight lines until they intersect the 25° angle constructed to the outside of the angle *P* line. This completes area *A*. Plot the value of area *B* at the down range end of the beyond distance *X* and scribe an arc between the area *A* boundaries. This completes area *B*. (See figure C–10.)

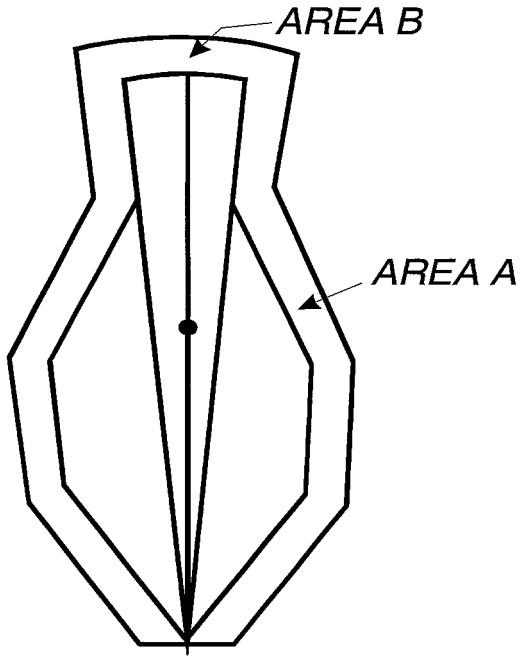

Figure C–10. Addition of areas *A* and *B*

C–3. Multiple or composite SDZs

a. A single SDZ for a particular weapon system can be expanded to accommodate multiple firing positions and or targets for that weapon system.

(1) To apply a single SDZ (see fig C–10 without areas *A* and *B*) to a single weapon system engaging multiple targets (for example, a target array), use the GTL to the left most target to establish the left limit of fire of the SDZ. Next, use the GTL to the right most target to establish the right limit of fire. In essence, the GTL of the single SDZ is bisected to encompass the target array, thereby, establishing left and right limits of fire. (See figure C–11.) From the firing position, scribe an arc between the left and right limits of fire at a radius equal to distance *X* to complete the SDZ. (See figure C–12.)

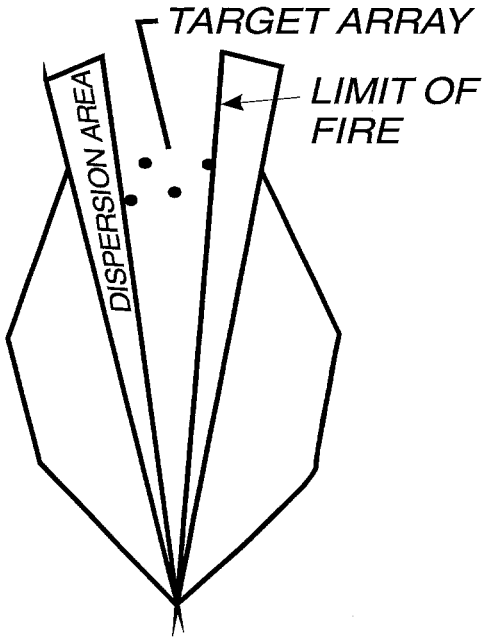

Figure C–11. Single firing position, target array

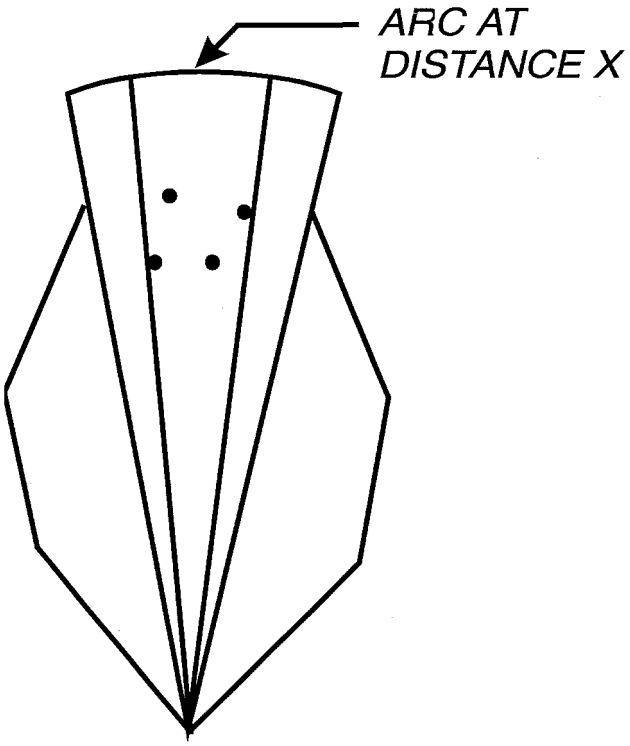

Figure C–12. Completion of SDZ

(2) To apply a single SDZ (see fig C–10 without areas *A* and *B*) to multiple weapon systems of the same type and caliber engaging multiple targets (with no cross firing, for example, GTLs not intersecting each other) on a straight firing line, bisect the GTL to establish left and right limits of fire. Establish the left limit of fire along the left most firing position and target, and the right limit of fire along the right most firing position and target. (See figure C–13.) Draw a straight line between the left and right limits of fire at distance *X* to complete the SDZ.

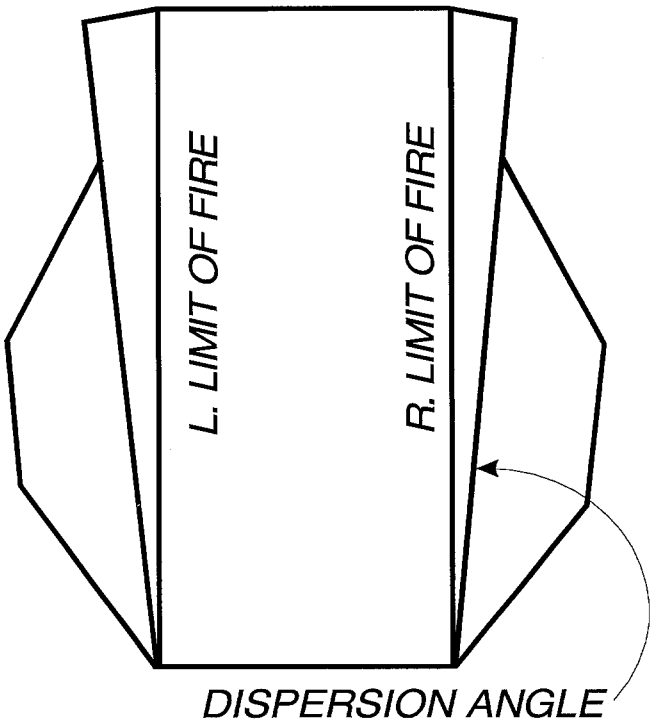

Figure C–13. Multiple firing positions

b. Multiple-weapon systems of the same type and caliber located along an irregular firing line may require individual SDZs for each weapon system. A single composite SDZ whose total envelope includes these individual SDZs can be used for the firing exercise.

c. Alternatively, automated SDZs (for example, ASDZs) can be used to generate composite SDZs. Use of automation also provides the ability to graphically and accurately depict planimetric and profile depictions of either single or composite SDZs. This reduces the manpower and time needed to construct three-dimensional SDZ portrayals to a fraction it would take to construct the same SDZ portrayal manually. Furthermore, automated SDZ layers overlaid on existing digitized mapping, terrain modeling, CADD designs or combinations thereof afford the ability to rapidly and accurately construct and review the effects of topography and terrain on individual or composite SDZs. This includes the conduct of intervisibility, line-of-sight analysis, and SDZ truncation where terrain can mitigate or reduce the total land area required to effectively and safely conduct live-fire training. Finally, automated SDZs offer commanders and trainers the opportunity to explore multiple training scenarios, mission planning, or to evaluate new and foreign weapons systems in a fraction of the time needed for manual means at an increased level of accuracy and fidelity.

C–4. CALFEX/CAX SDZs

a. CALFEX (Army)/ CAX (Marines) is a combat exercise in which combined arms teams in combat formation conduct coordinated combat firing and maneuver practice in executing the assault, seizure, and defense of appropriate objectives. Tactical air support may be included. Combining (overlaying) multiple SDZs for a CALFEX/CAX scenario is the terminal application of SDZs. Regardless of the number and types of SDZs a CALFEX/CAX requires, a systematic approach will result in successful definition of each SDZ and allow training to be accomplished safely.

b. SDZs of multiple weapon systems in a CALFEX/CAX scenario result in a composite SDZ. This composite SDZ

identifies total real estate requirements at a given sequence (or phase) of a CALFEX/CAX. (See figure C–14.) Numerous sequenced or time-phased composite SDZs may exist depending on the complexity of a particular CALFEX/CAX.

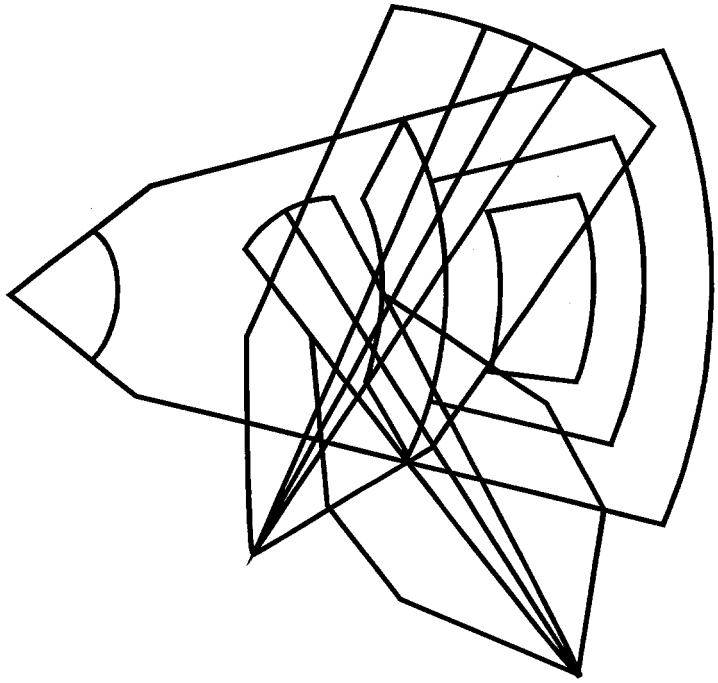

Figure C–14. CALFEX

C–5. SDZ templates

a. SDZs can be inked and photocopied onto acetate for use as templates. Technical pens, available through the Government Services Administration, are ideal for inking SDZs for reproduction. Training aid support centers or automated SDZ systems can assist in reproducing templates. Templates that have been photocopied or reproduced from photographic techniques should be verified for accuracy to ensure critical parameters are not distorted or otherwise incorrectly reproduced (for example, scale changes.)

b. Templates are quick aids for reviewing SDZs for live-fire training operations. It is imperative that SDZs are drawn accurately and precisely for use in preparing templates.

C–6. SDZ parameters

a. Use of range-to-target data in this pamphlet for constructing SDZs is a departure from traditional construction methodology. Range-to-target data allow range officers greater flexibility to manage real estate assets within the installation training complex to meet mission requirements of the command.

b. Range-to-target data do not account for human error; they represent actual weapon system performance characteristics based on both test data and computer simulation for targets at various ranges. SDZs constructed on the basis of range-to-target data for a specific range will provide adequate safety. These SDZs will contain munitions fired under normal operating conditions at target ranges represented by range to target data.

Glossary

Section I
Abbreviations

ADA
air defense artillery

AGL
above ground level

AMC
United States Army Materiel Command

AR
Army Regulation

ARSOF
Army Special Operations Forces

ASP
ammunition supply point

CG
commanding general

DA
Department of the Army

DARR
Department of the Army regional representative

DOD
Department of Defense

DES
demolitions effects simulators

EOD
explosive ordnance disposal

FAA
Federal Aviation Administration

FIST
fire support team

FM
field manual

HE
high explosives

HEAT
high explosive antitank

HQ
headquarters

km
kilometers

MACOM
major Army command

MSD
minimum safety distance

NBC
nuclear, biological, and chemical

NCO
noncommissioned officer

NSN
national stock number

OCONUS
outside continental United States

OIC
officer in charge

PAO
public affairs office

QE
quadrant elevations

RAP
rocket-assisted projectiles

RSO
range safety officer

SAA
small arms ammunition

SOP
standing operating procedures

TB
technical bulletin

TC
training circular

TJAG
The Judge Advocate General

TM
technical manual

TOW
tube-launched, optically tracked, wire-guided

TP
training practice

TRADOC
United States Army Training and Doctrine Command

USACE
United States Army Corps of Engineers

USMC
United States Marine Corps

UXO
unexploded ordnance

VT
variable time

WP
white phosphorous

Section II
Terms

140 dBP contour
The distance at which the impulse noise produced by the weapon or explosive is 140 decibels peak level. See also hearing hazard zone.

ammunition lot
A quantity of components, each of which is manufactured by one manufacturer under uniform conditions, and which is expected to function in a uniform manner. The lot is designated and identified by assignment of an ammunition lot number and preparation of an ammunition data card.

angle *P*
The area beginning at the firing point, located to the left and right of the dispersion area, which contains projectiles after making initial contact with the target medium.

angle *Q*
The area beginning at distance *Y*, located to the left and right of the dispersion area, which contains projectiles after making initial contact with the target medium.

approved hearing protector (or protection)
Hearing protector types that are approved for use by the Army and are listed in DA PAM 40–501.

area *A*
The secondary danger area (buffer zone) that laterally parallels the impact area or ricochet area (depending on the weapon system) and contains fragments, debris, and components from frangible or explosive projectiles and warheads functioning on the right or left edge of the impact area or ricochet area.

area *B*
The secondary danger area (buffer zone) on the downrange side of the impact area and area *A* which contains fragments, debris, and components from frangible or exploding projectiles and warheads functioning on the far edge of the impact area and area *A*.

area *C*
The secondary danger area (buffer zone) on the up range side of the impact area and parallel to area *B* which contains fragments, debris, and components from frangible or exploding projectiles and warheads functioning on the near edge of the impact area.

area *D*
The safe area between areas *C* and *E* for indirect, overhead fire of unprotected personnel in training.

area *E*
The danger area between an indirect fire weapon system and area *D*. This area is endangered by muzzle debris, overpressure, blast, and hazardous impulse noise. Personnel in service batteries firing from approved tactical configurations may occupy area *E*.

area *F*
The danger area to the rear of a weapon system that is endangered by back-blast debris, overpressure, blast, and hazardous impulse noise.

area *H*
The area to the rear of a weapon system (for example, TOW missile) that contains warhead particles (collapsed shape charge and warhead fragments) during an "eject only" firing event.

area *I*
The area immediately in front of certain missile weapon systems designated as the initial zone of impact for "eject only" firing events. Area *I* may not be occupied under deviation.

area *S*
The radius of *S* value around a laser target from which all specularly reflective surfaces must be removed, covered, painted, or destroyed before laser operations commence.

area *T*
The area within an established laser surface danger zone measured from the laser device to t meters downrange where no object will be lased. Personnel should avoid direct exposure to unprotected skin up to t meters from the laser device. Exposure hazards to the eye are far greater within area *T* than those exposure hazards to the skin.

Army Special Operations Forces
Those active and reserve component Army forces designated by the Secretary of Defense that are specifically organized, trained, and equipped to conduct and support special operations.

assistant range safety officer
Officer, warrant officer, or noncommissioned officer designated and briefed by the OIC and RSO, who assists the RSO in carrying out the safety responsibilities for the range or activity.

backstop, laser
Opaque structures or terrain in the controlled area of a laser surface danger zone such as a hill, dense tree line, or a windowless building that would completely obstruct any view beyond it and completely terminate a laser beam that may miss the target.

barrier
A permanent or temporary impediment to foot and or vehicular traffic which personnel are prohibited to pass without approval from range control. A barrier may be sentinel, wire fencing, gate, sign, or other access-limiting device.

buttoned-up
All hatch covers are in a closed and secure position.

cease-fire
A command given by anyone observing an unsafe firing condition on any training complex to immediately terminate an active (hot, wet) firing status of a weapon system(s).

central register
An official record of range safety deviations held at the respective major Army command (MACOM).

certified ammunition
Ammunition, to include fuzes, propellants, and projectiles, which have been cleared by the U.S. Army Materiel Command for overhead fire of unprotected personnel.

cold firing status
A firing condition where authorization to fire a weapon system has not been given or has been revoked by the installation range control office. Also referred to as a dry firing status.

combined arms live-fire exercises (Army)/combined arms exercise (Marine Corps)
A combat exercise in which Army/Marine Corps combined arms teams in combat formation conduct coordinated combat firing and maneuver practice in executing the assault, seizure, and defense of appropriate objectives. Tactical air support may be included.

command responsibility
As it relates to range safety, commanders down the entire chain of command are responsible for the safety of their personnel.

conservation
The protection, improvement, and use of natural resources according to principles that will provide optimum public benefit and support of military operations.

contaminated area
Any area where there are known or suspected unexploded munitions (dud ammunition or explosives) regardless of type.

control tower
A structure usually situated behind the firing line or position from which range operations of a training event is controlled.

cookoff
A functioning of any or all of explosive components due to high temperatures within a weapon system.

Crew-served weapon system
Any weapon system requiring two or more personnel to fire the system.

cross-sectional terrain profile
A profile of the surface danger zone being considered for deviation at a point laterally downrange where a hill mass is expected to attenuate projectiles and/or hazardous fragments.

decibel peak level
A logarithmic method of expressing the peak pressure caused by an explosion.

dedicated impact area
See impact area.

deviation
A departure from the requirements of this pamphlet and the policy in AR 385–63/MCO 3570.1B, Range Safety.

direct fire
Fire delivered on a target when the weapon system is laid by sighting directly on the target using the weapon system sighting equipment.

dispersion area
The area within the surface danger zone located between the GTL and the ricochet area. This area accounts for human error, gun or cannon tube wear, propellant temperature, etc.

distance *D*
Distance along specific angle, measured from the weapon target line, at the firing position down range for selected direct fire weapons. Distance *D* defines maximum projectile distance along this line.

distance *L*
The distance downrange from the launch point where the launch dispersion angle intersects the flight corridor boundaries for the Patriot missile.

distance *W*
The maximum lateral distance a projectile will ricochet after impacting within the dispersion area. Distance *W* defines the maximum lateral edge of the ricochet area.

distance *X*
The maximum distance a projectile (to include guided missiles and rockets) will travel when fired or launched at a given quadrant elevation with a given charge or propulsion system.

distance *Y*
The maximum distance downrange at which a lateral ricochet is expected to occur when a projectile is fired at a given quadrant elevation.

double hearing protector (or protection)
Wearing earplugs in combination with noise muffs or noise attenuating helmets. Impulse levels can be so high that single hearing protection does not adequately protect hearing.

downrange
A descriptive term used to address the orientation of personnel, materiel, or property relative to the direction or path of ammunition and or explosives (to include guided missiles and rockets) fired or launched from weapon systems. The direction of orientation is from the firing line or position toward the target.

dud
An explosive item or component of a weapon system that fails to function as intended when fired.

eject only firing event
A firing sequence where the launch motor of a missile functions, thereby, ejecting the missile out of the launcher, but the flight motor fails to ignite causing the missile to tumble. As the missile tumbles and strikes the ground, sufficient G–Force initiates the warhead causing warhead particles to be projected outward.

far edge
The boundary of the impact area that borders the outside edge of area *B* and is farthest from the firing point or position.

field expedient explosive device
A standard item of explosive that is combined with other standard explosive items or non-explosive items using techniques and procedures outlined in doctrinal publications (FMs and TMs.)

final safety acceptance inspection
Major Army command safety inspection of new construction or modification of a range prior to release from the contractor, or other contracting agent, Government or non-Government.

firing lane
The area within which a weapon system is fired. It consists of a start fire line, cease fire-disarm line, and left and right limits of fire.

firing line
The line from which weapon systems are fired downrange which consists of firing points or positions.

firing position
The point or location at which a weapon system (excluding demolitions) is placed for firing. For demolitions, the firing position is the point or location at which the firing crew is located during demolition operations.

flak jacket
Fragmentation body armor protective vest (CTA 50–900 Update.)

fork
The change in angle of elevation necessary to produce a change to the center of impact equivalent to four probable errors.

guided missile
An unmanned vehicle moving above the surface of the earth whose trajectory or flight is capable of being altered by an external or internal mechanism.

gun target line (GTL)
An imaginary line drawn between the firing position and target position. Also referred to as the line of fire.

HC smoke
Hexachloroethane-zinc oxide used to generate screening smoke.

hangfire
An undesired delay in the functioning of a firing system. A hangfire for a rocket occurs if the rocket propellant is ignited by the firing impulse but the rocket fails to exit the launcher within the expected time.

hearing hazard, hearing hazard zone
All personnel exposed to levels of 140 dBP and above must wear hearing protection. The area where the impulse noise levels are 140 dBP or higher and hearing protection is required.

hearing protection zone
Area on the range within which all personnel must wear hearing protection during weapons fire. It may be larger than the hearing hazard zone, but never smaller.

high-hazard impact area
See impact area.

hot firing status
A firing condition where authorization to fire a weapon system has been given by the installation range control office. Also referred to as a wet firing status.

impact area
The ground and associated airspace within the training complex used to contain fired, or launched ammunition and explosives, and the resulting fragments, debris, and components from various weapon systems. A weapon system impact area is the area within the surface danger zone used to contain fired, or launched ammunition and explosives, and the resulting fragments, debris, and components. Indirect fire weapon system impact areas include probable error for range and deflection. Direct fire weapon system impact areas encompass the total surface danger zone from the firing point or position downrange to distance *X*.

a. Temporary impact area. An impact area within the training complex used for a limited period of time to contain fired or launched ammunition and explosives and the resulting fragments, debris, and components. Temporary impact areas are normally used for non-dud producing ammunition or explosives, and should be able to be cleared and returned to other training support following termination of firing.

b. Dedicated impact area. An impact area that is permanently designated within the training complex and used indefinitely to contain fired or launched ammunition and explosives and the resulting fragments, debris, and components. Dedicated impact areas are normally used for non-sensitive ammunition and explosives.

c. High-hazard impact area. An impact area that is permanently designated within the training complex and used to contain sensitive high explosive ammunition and explosives and the resulting fragments, debris, and components. High hazard impact areas are normally established as part of dedicated impact areas where access is limited and strictly controlled due to the extreme hazard of dud ordnance (that is, ICM, HEAT, 40-mm, and other highly sensitive ammunition and explosives.)

improved conventional munitions
Munitions characterized by the delivery of two or more antipersonnel or antimateriel and or antiarmor submunitions.

indirect fire
Fire delivered on a target when the weapon system is not in line of sight with the target.

installation
An aggregation of contiguous or near contiguous, common mission supporting real property holdings under the jurisdiction of the Department of Defense within and outside the continental United States. Examples include, but are not limited to, posts, camps, bases, and stations.

installation range control officer
A commissioned officer, warrant officer, non-commissioned officer, or civilian who serves as the central point of control and coordination for all activities conducted within the installation/community training complex, and implements and enforces the installation/community range safety program. This may include the scheduling and maintenance of the training complex.

intrabeam viewing
Looking directly into the path of a laser beam or reflected beam.

intraline distances
The distance used for separating certain specified areas and locations within explosive establishments.

instructor pilot
A qualified warrant or commissioned officer that is placed on military orders and is assigned the responsibility for the safe operation of assigned aircraft and associated weapon systems.

large rocket
A stabilized, free ballistic trajectory, long range field artillery type rocket with a range capability of greater than 100 km when using a nonnuclear warhead.

laser
A device capable of producing a narrow beam of intense light (LASER-light amplification by stimulated emission of radiation). See TB MED 524 and JCS Pub 3–09.1 for more information on lasers.

laser buffer zone
A safety margin on either side, above, and below the approved target area extending to a distance at which the beam is terminated by a backstop extending across the target zone or the nominal ocular hazard distance limit is reached. A vertical buffer zone covers the angular distances below the highest point on a backstop or above the nonlasing area. The laser horizontal buffer zone covers the angular distance to the left of the left most target and to the right of the right most target.

laser range finder
A range finder employing a laser device to emit a pulsed laser beam that is aimed at the target. The range is determined automatically by electronically measuring the time it takes for the light beam to travel from the laser to the target, be reflected from the target, and return to the range finder.

laser safety eyewear
Protective eyewear designed specifically to permit the user to be exposed to either a direct or reflected laser beam from a specific laser device without eye injury.

laser SDZ
A V-shaped zone designed to contain a laser beam (while lasing) with buffer zones on either side, above, and below the approved target.

logistics assistance representative
Department of Army civilian personnel in the grade of GS–11 and above who have received training in specific weapon systems and are qualified in accordance with AR 75–1 to assist in performing malfunction investigations.

low-angle fire
Fire delivered at angles of elevation equal to or below the angle corresponding to the maximum range of the gun and ammunition.

malfunction
Failure of an ammunition item to function as expected when fired, launched, or when explosive items function under conditions that should not cause functioning. Malfunctions include hangfires, misfires, duds, abnormal functioning and premature functioning of explosive items under normal handling, maintenance, storage, transportation, and tactical deployment. Malfunctions do not include accidents or incidents that arise solely from negligence, malpractice, or situations such as vehicle accidents or fires.

military operations in urban terrain
A terrain complex where manmade construction impacts on the tactical options available to commanders. Military operations in urban terrain facilities replicate urban sprawl environments.

misfire
A complete failure to fire that is not necessarily hazardous. Because it cannot be readily distinguished from a delay in functioning (hangfire), it must be handled as worst case in accordance with procedures for the weapon system.

mission-essential area
The area within the surface danger zone located adjacent to the impact area that is allowed to be occupied only by essential personnel needed to accomplish the assigned task or mission.

mission-essential personnel
Those individuals who are directly involved or in support of weapon systems firing without whom the firing mission could not take place.

navigable waterway
Any body of water open to the free movement of marine vessels.

near edge
The boundary of the impact area that borders area *C* and is nearest to the firing point or position.

nominal ocular hazard distance
The intrabeam distance within which the laser beam's irradiance or radiant exposure falls below the applicable exposure limit.

nominal ocular hazard distance-optical
The nominal ocular hazard distance when viewed with optical aids.

nominal ocular hazard distance-magnified.
The nominal ocular hazard distance for intrabeam viewing through 7x50 binoculars that transmit 70 percent at 1064 nanometers and 85 percent at 694.3 nanometers.

nominal ocular hazard distance-single
The nominal ocular hazard distance for a laser device operating in the single pulse mode.

nonstandard explosive item
An explosive device, material, or component that has not been type classified by AMC, or is a standard explosive item that has been altered to change its characteristics and function.

officer in charge
The officer, warrant officer, or noncommissioned officer responsible for personnel conducting firing or operations within the training complex.

overhead fire
Weapon system firing that is delivered over the heads of unprotected personnel in training or personnel located anywhere in the surface danger zone.

primary danger area
An area within the surface danger zone where hazards are known to exist and in which no unprotected soldier/Marine or materiel is permitted since injury or death to such personnel and damage to materiel is probable. Target, dispersion, and ricochet areas are primary danger areas.

probable error
A measure of the impact distribution in the dispersion pattern around the center of impact dimensionally expressed in firing tables as one interval of the dispersion rectangle.

proper eye protection (or eye armor)
Approved eye protection, as a minimum, when required by safety and or installation/community range regulations and or standing operating procedures.

proper hearing protection
Approved single or double hearing protection, as a minimum, when required by safety or installation range regulations or standing operating procedures.

public traffic route distance
The distance in feet used to separate any public highway, navigable stream, passenger railroad, or aircraft taxiway from potential explosion sites. (See DA Pam 385–64 for Quantity-Distance Tables.)

quality assurance specialist (ammunition surveillance)
Department of Army Civilian personnel in the grade of GS–09 or above who have received 2 years of ammunition training and are qualified in accordance with AR 75–1 to assist in performing malfunction investigations.

range error
Difference between the range to the point of impact of a particular projectile and the range to the mean point of impact of a group of artillery projectiles fired with the same data.

range officer
See installation range control officer.

range personnel
Persons designated to assist the range control officer in executing the Installation Range Safety Program.

range safety officer
The officer, warrant officer, or noncommissioned officer who is the direct representative of the OIC of firing or other operations. The RSO is responsible to the OIC for insuring the adequacy of safety of firing, training operations, and ensuring compliance with laser range safety requirements and local standing operating procedures.

rear range
A descriptive term used to address the orientation of personnel, materiel, or property to the rear of a weapon system.

ricochet area
The area located to the left and right of the dispersion area that contains projectiles after making initial contact with the target medium. For surface danger zones having angles *P* and *Q*, it is also the area located to the left and right of the dispersion area. The ricochet area is defined by distance *W*.

right and left range
A descriptive term used to address the orientation of personnel, materiel, or property within the surface danger zone relative to the GTL.

risk management
The process of weighing (analyzing) training realism and the expected benefits of an exercise or operation against the known risks.

safe area
An area within the surface danger zone where the probability of injury is minimal to exposed soldiers/Marines or those provided with protective cover.

safety certification program
A program established and maintained by the battalion/squadron commander to ensure that personnel under their command designated as OICs and RSOs are competent and qualified to carry out the responsibilities and duties of the respective positions.

secondary danger zone
An area outside of the primary danger area which provides containment of fragments, debris, and components from frangible or high explosive projectiles and warheads functioning on the far edge of the primary danger area. Areas *A*, *B*, and *C* are secondary danger areas.

senior range safety officer
The officer designated as the range safety officer for crew served guided missiles and heavy rockets, excluding direct fire antitank missiles and rockets.

single hearing protector (or protection)
Wearing either earplugs or noise muffs or noise attenuating helmets.

special use airspace
Airspace of defined dimension identified by an area on the surface of the earth wherein activities must be confined because of their nature and or wherein limitations that may be imposed upon aircraft operations that are not a part of those activities.

specularly reflective surface
A mirror like surface capable of reflecting a laser beam.

subcaliber ammunition
Practice ammunition of a caliber smaller than standard for the weapon system. Subcaliber ammunition is economical and may be fired in relatively smaller areas. It is used with special subcaliber equipment and devices to simulate firing conditions with standard ammunition.

surface danger zone
The ground and airspace designated within the training complex (to include associated safety areas) for vertical and lateral containment of projectiles, fragments, debris, and components resulting from the firing, launching, or detonation of weapon systems to include explosives and demolitions.

target area
The point or location within the surface danger zone where targets (static/moving, point/array) are emplaced for weapon system engagement. For demolitions, it is the point or location where explosive charges are emplaced.

temporary impact area
See impact area

training complex
Firing ranges and weapons training facilities designated for firing ammunition and explosives, heavy rockets, and guided missiles for training and target practice, and nonlive-fire sites for maneuver exercises and operations.

training site
A designated location to train, usually within the confines of the training complex. A specific firing range and or weapons training facility designated for firing ammunition and explosives, heavy rockets, and guided missiles for training and target practice, and non-live-fire sites for maneuver exercises and operations.

trajectory safety officer
The individual who assists the senior range safety officer, and is responsible for determining when crew served guided missiles and heavy rockets should be destroyed or thrust terminated.

unexploded ordnance
Ammunition and explosives which have been primed fused, armed, or otherwise prepared for action and which has been fired, dropped, launched, projected or placed in such a manner as to constitute a hazard to operations, installations/communities, personnel, or materiel, and remains unexploded either by malfunction or design or any other cause.

unit commander
A commander of an Army or Marine Corps element whose structure is prescribed by competent authority, such as a table of organization and equipment.

uprange
A descriptive term used to address the orientation of personnel, materiel, or property relative to the direction or path of ammunition and or explosives (to include guided missiles and rockets) fired or launched from weapon systems. The orientation is from the target area or impact area toward the firing line or position.

weapon system qualified
An individual, military or civilian, who has completed a standard program of instruction for a particular weapon system.

weapon system knowledgeable
An individual, military or civilian, who has completed a standard program of instruction for a particular weapon system or has completed familiarization training established by the installation commander. Familiarization training may involve live-fire training. Familiarization training should be approved by proponent school.

Section III
Special Abbreviations and Terms

This publication uses the following abbreviations, brevity codes, and acronyms not contained in AR 310–50. These

include use for identifying weapons systems, types of military training activities, U.S. Marine Corps organizations and publications, range hazard descriptions and name changes to Army organizations and offices.

AMCOM
United States Army Aviation and Missile Command

APERS
antipersonnel

AP
antipersonnel mine

ARSO
assistant range safety officer

ASDZ
automated surface danger zone

AT&A
air traffic and airspace officer

ATWESS
antitank weapons effect training

BFA
blank firing attachment

BDU
battle dress uniforms

CALFEX
combined arms live-fire exercises

CFA
controlled firing area

cm
centimeter

COMMARCORSYSCOM
Commander, Marine Corps Systems Command

COMMARFORLANT
Commander, Marine Forces Atlantic

COMMARFORPAC
Commander, Marine Forces Pacific

COMMARFORRES
Commander, Marine Forces Reserve

DASAF
Director of Army Safety

dBP
decibel peak level

DDESB
Department of Defense Explosives Safety Board

ESOH
environment, safety, and occupational health

FMFM
Fleet Marine Field Manual

fpm
feet per minute

ft
feet

GTL
gun target line

HC
hexachloroethane

HMMWV
high multipurpose wheeled vehicle

ICM
improved conventional munitions

LRSO
laser range safety officer

m
meter

m^3
cubic meter

MAAWS
Multirole Antiarmor Antipersonnel Weapons System

MARCORSYSCOM
Marine Corps Systems Command

MCCDC
Marine Corps Combat Development Command

MCO
Marine Corps Order

MEA
mission-essential area

METL
mission-essential task list

mg
milligram

MIL–HDBK
military handbook

MLRS
multiple launch rocket system

mm
millimeters

m/s
meters per second

MSL
mean sea level

MTL
missile target line

NAVREP
Navy representative

OSHA
Occupational Safety and Health Administration

QASAS
quality assurance specialist, ammunition surveillance

RAAWS
range antiarmor weapon system

RCA
riot control agents

RCO
range control officer

RRPR
reduced range practice rocket

SDZ
surface danger zone

SLAP
saboted light armor penetrator

SNCO
staff noncommissioned officer

SRSO
senior range safety officer

SSD
safe separation distance

SUA
special use airspace

T
times

TA
terephthalic acid

TPGID
tank precision gunnery inbore device

TSO
trajectory safety officer

USAASA
U.S. Army Aeronautical Services Agency

USASOC
United States Army Special Operations Command

USATCES
United States Army Technical Center for Explosive Safety

USAPD

ELECTRONIC PUBLISHING SYSTEM
OneCol FORMATTER WIN32 Version 200

PIN:	079965–000
DATE:	04- 9-03
TIME:	15:27:17
PAGES SET:	211
DATA FILE:	C:\wincomp\p385-63.fil
DOCUMENT:	DA PAM 385–63
SECURITY:	UNCLASSIFIED
DOC STATUS:	NEW PUBLICATION